DANDREA®

THE ART OF PRECISION

EN

EVOLUTION OF A LONG TRADITION

Made in Italy

Golden Compass award
for industrial design

D'ANDREA®
THE ART OF PRECISION

made in italy

PRECISION IS OUR STRENGTH

D'ANDREA S.p.A. is an Italian company, world leader in the production of high precision accessories for machine tools. D'Andrea was founded in 1951 by Marino D'Andrea, who started the business with the industry's first facing and boring head.
The D'Andrea brand is recognized worldwide, through a dealer network in over 50 countries, for the quality and reliability of its products.

D'Andrea Marino
The Founder

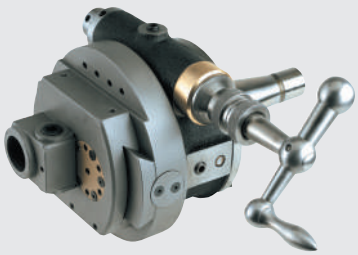

1951 - The first Head
for Boring and Facing

Ermanno with his sons Amedeo
and Marino and daughter Maria Pina.

A tradition of more than 70 years in the manufacturing sector and a great passion for mechanics that is now inherited by the third generation, with the aim of responding to the increasingly demanding requests from the world of precision mechanics. Every year significant resources are invested in Research and Development of new products that satisfy a highly qualified demand through advanced technological solutions.

Lainate (Milan)

D'Andrea S.p.A. represents the headquarters of the group, based in Lainate, a few kilometers from Milan. With over 7.000 sqm, D'Andrea boasts a modern, functioning and efficient plant where several machine tools are involved in the production of Tools and Heads. In particular, the grinding operations as well as the final test and assembly are here carried out.

Castel Del Giudice (Isernia)

D'Andrea Molise was founded in 2001 in Castel Del Giudice (Isernia), where Marino - the founder, was born. In this plant, most of the semi-finished products are made and, subsequently, finished, mounted and tested in the headquarters.

D'ANDREA®

Master

TOOLS

MHD'

	MHD' 16	MHD' 20	MHD' 25	MHD' 32	MHD' 40	MHD' 50
TS ROUGHING HEADS	TS 16/16 Ø 18 ~ 22	TS 20/20 Ø 22 ~ 28	TS 25/25 Ø 28 ~ 38	TS 32/32 Ø 35.5 ~ 50	TS 40/40 Ø 50 ~ 68	TS 50/50 - 50/63 Ø 68 ~ 90 Ø 90~120
TRM-TRE TESTAROSSA 2 µm	TRM 16 Ø 18 ~ 23	TRM 20 Ø 22 ~ 29	TRM 25 Ø 28 ~ 38	TRM 32 Ø 35.5 ~ 51.5	TRM 40 Ø 48 ~ 63	TRM 50 Ø 2.5 ~ 140 / TRE 50 Ø 2.5 ~ 142
TRC TESTAROSSA 10 µm	TRC 16 Ø 18 ~ 24	TRC 20 Ø 22 ~ 30	TRC 25 Ø 28 ~ 40	TRC 32 Ø 35.5 ~ 53.5	TRC 40 Ø 48 ~ 66	TRC 50 Ø 2.5 ~ 140

ARBORS PR-RD-RAV-BMD

8-10 DIN 69871 / MAS403BT / PSC / HSK

11-12 PR EXTENSIONS / RD REDUCTIONS / RAV VIBRATION-DAMPING / BMD CARBIDE BARS

14-15 TS ROUGHING HEADS

16-22 TRM-TRE TESTAROSSA 2 µm

23 TRC TESTAROSSA 10 µm

PSC

ARBORS PR-RD

28 DIN 69871 / MAS403BT / HSK

29 PR EXTENSIONS / RD REDUCTIONS

TS ROUGHING HEADS 30-31

PSC 50: PSC50 - TS50 Ø 68 ~ 90

PSC 63: PSC63 - TS50 Ø 68 ~ 90; PSC63 - TS63 Ø 90 ~ 120; PSC63 - TS80 Ø 120 ~ 200

TRM TESTAROSSA 2µm 33-37

PSC50 - TRM50 Ø 2.5 ~ 140

PSC63 - TRM50 Ø 2.5 ~ 140; PSC63 - TRM63 Ø 2.5 ~ 155; PSC63 - TRM80 Ø 2.5 ~ 220

MONOforce 50-51

HIGH PRECISION ULTRA-TIGHT TOOLHOLDERS Ø 12 / 20 / 32

DIN 69871 / MAS BT / PSC / HSK-A / 5 µm

HEADS

U-TRONIC STANDARD

TESTE CN 58-65

UT 3-360 Ø max 800 / UT 5-500 Ø max 1000 / UT 5-630 Ø max 1250 / UT 5-800 Ø max 1600 / UT 8-800 Ø max 1600 / UT 8-1000 Ø max 2000 / UT 8-1250 Ø max 2500 / UT 8-1600 Ø max 3200

BORING-MILLING MACHINES MEDIUM AND LARGE SIZES

TA-CENTER 2

TA-C2.110 Ø max 200 / TA-C2.170 Ø max 320

TESTE CN 66-71

ARBORS HT

U-DRIVE

MACHINING CENTERS

TA-TRONIC 2

TA-T2.110 Ø max 200 / TA-T2.170 Ø max 320

TESTE CN 72-73

ARBORS HT

MOTOR

MILLING MACHINES

BACKWARD 24

INSERTS 44-45

TECHNICAL DATA 46-49

Painting

made in italy

Golden Compass award for industrial design

MHD' 63 / MHD' 80

TS 63/63
Ø 90 ~ 120

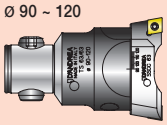

TS 80/80
Ø 120 ~ 200

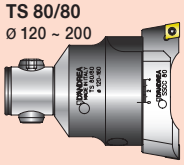

TS 80/90
Ø 160 ~ 250

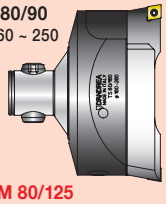

TRM 50/63 - 63/63
Ø 2.5 ~ 155

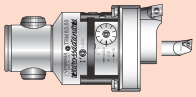

TRM 50/80 - 80/80
Ø 2.5 ~ 220

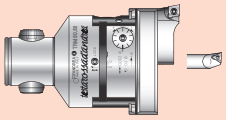

TRM 80/125
Ø 36 ~ 500

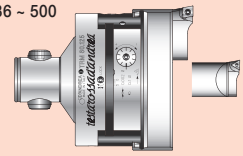

TRC 63
Ø 72 ~ 110

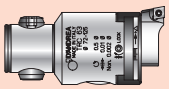

TRC 80
Ø 88 ~ 132

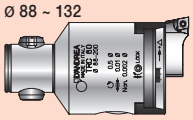

MILLING DRILLING 25

PE COLLET CHUCKS

FORCE HIGH CLAMPING POWER

FORCE HIGH CLAMPING POWER

PF SHELL MILL HOLDERS

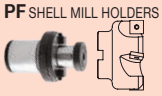

MILLING DRILLING 32

ER COLLET CHUCKS

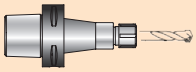

FORCE HIGH CLAMPING POWER

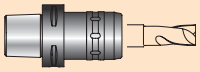

PF SHELL MILL HOLDERS

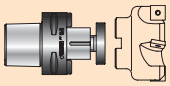

TCD' TURNING 38

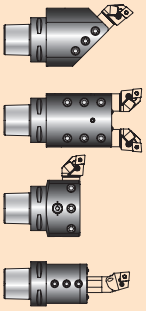

REDUCTIONS TO MHD' 29

PSC MHD'

PSC 50 → MHD' 50

PSC 63 → MHD' 50 - 63

PSC 80 → MHD' 50-63-80

MONOd' 52

PRECISION COLLET CHUCK HOLDERS ER 16 / 25 / 32

DIN 69871

MAS BT

PSC

HSK-A

BHT CROSS BARS 39-43

BORING - TURNING

BHT 250 Ø 250 ~ 500
BHT 500 Ø 500 ~ 750
BHT 750 Ø 750 ~ 1000

On request for ø over 1000 mm

ROUGHING

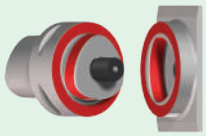

PATENTED

ARBORS HT

DIN - BT - PSC - HSK - CAT - MHD'

FINISHING
2 µm

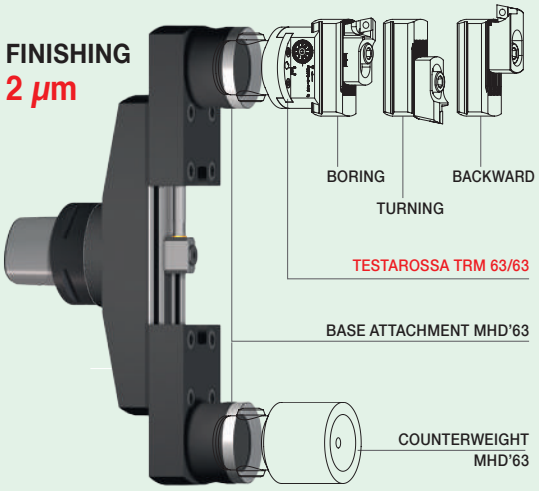

BORING-MILLING MACHINES MEDIUM AND LARGE SIZES

TOOLS

EXTENDED ANGULAR HEADS GEARBOX HOLE DOUBLE SLIDE HIGH SPEED (BALANCED)

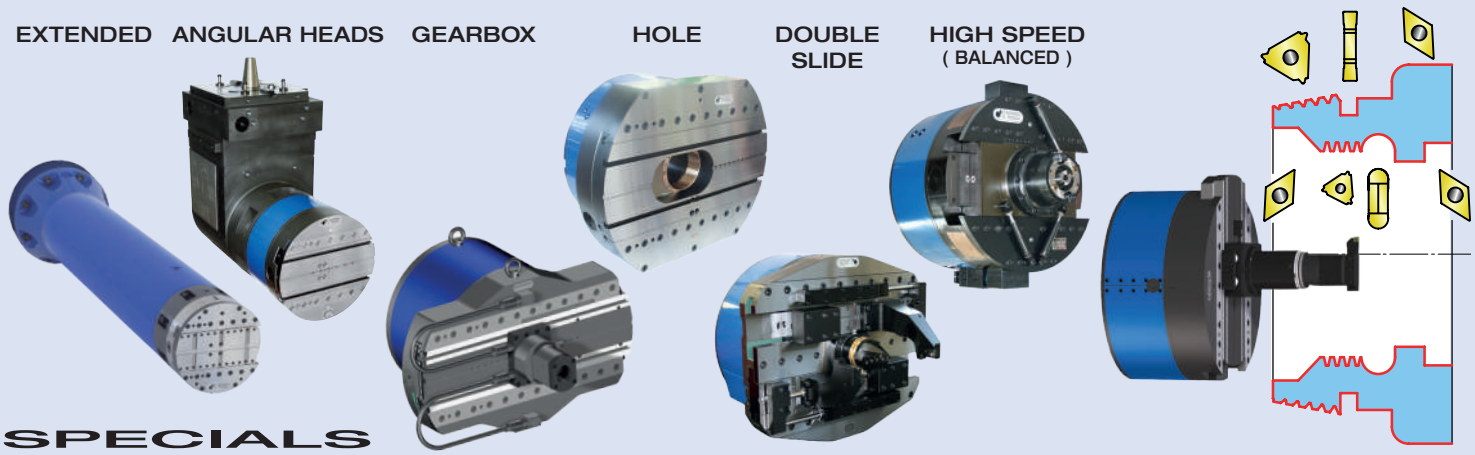

SPECIALS

AR

AR 125 Ø max 320
AR 160 Ø max 400

AUTOMATIC FACING HEADS

74-75

ARBORS **MHD'**

MACHINING CENTERS MILLING MACHINES

REVERSE

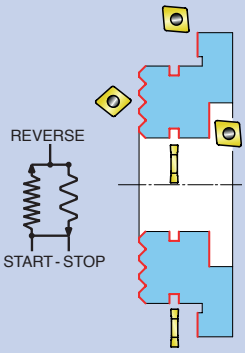

START - STOP

TA-SENSITIV 2

TA-S2.120 Ø max 250
TA-S2.170 Ø max 400

FACING AND BORING HEADS

76-77

ARBORS **MHD'**

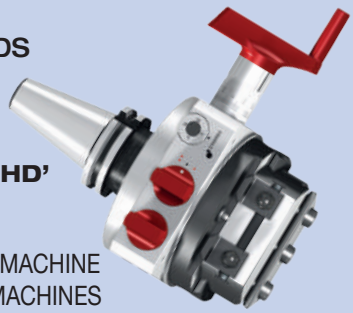

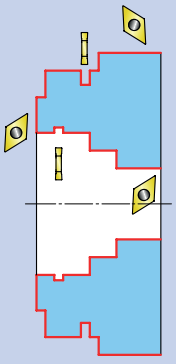

MILLING-BORING MACHINE CONVENTIONAL MACHINES

HEADS

WINTOOL 47

ACCESSORIES 53

SPARE PARTS 54-57

High-precision modular toolholders that are produced for boring, milling and drilling operations with extreme flexibility and rigidity.

The MHD’ coupling is the heart of the Modulhard’andrea tool system. Available in 8 sizes, it guarantees the interchangeability of all the elements of the system, which includes arbors, extensions, reductions and toolholder adapters.

MHD' COUPLING

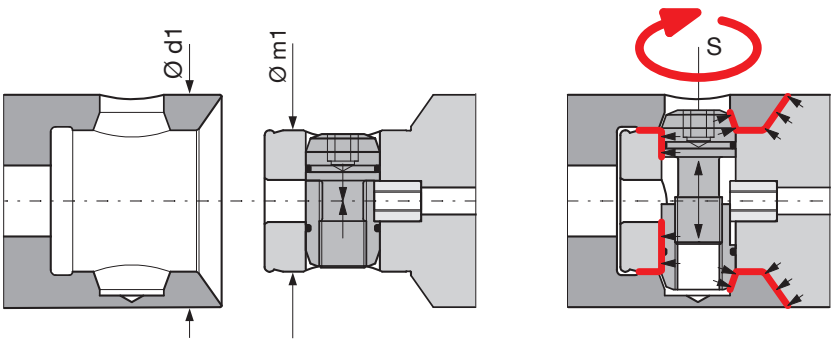

MHD'	Ø d1	Ø m1	⬡ S	N·m
16	16	10	2,5	2 - 2,5
20	20	13	3	4 - 4,5
25	25	16	3	6,5 - 7,5
32	32	20	4	7 - 8
40	40	25	5	16 - 18
50	50	32	6	30 - 35
63	63	42	8	70 - 80
80	80	42	8	70 - 80

ARBORS MHD'

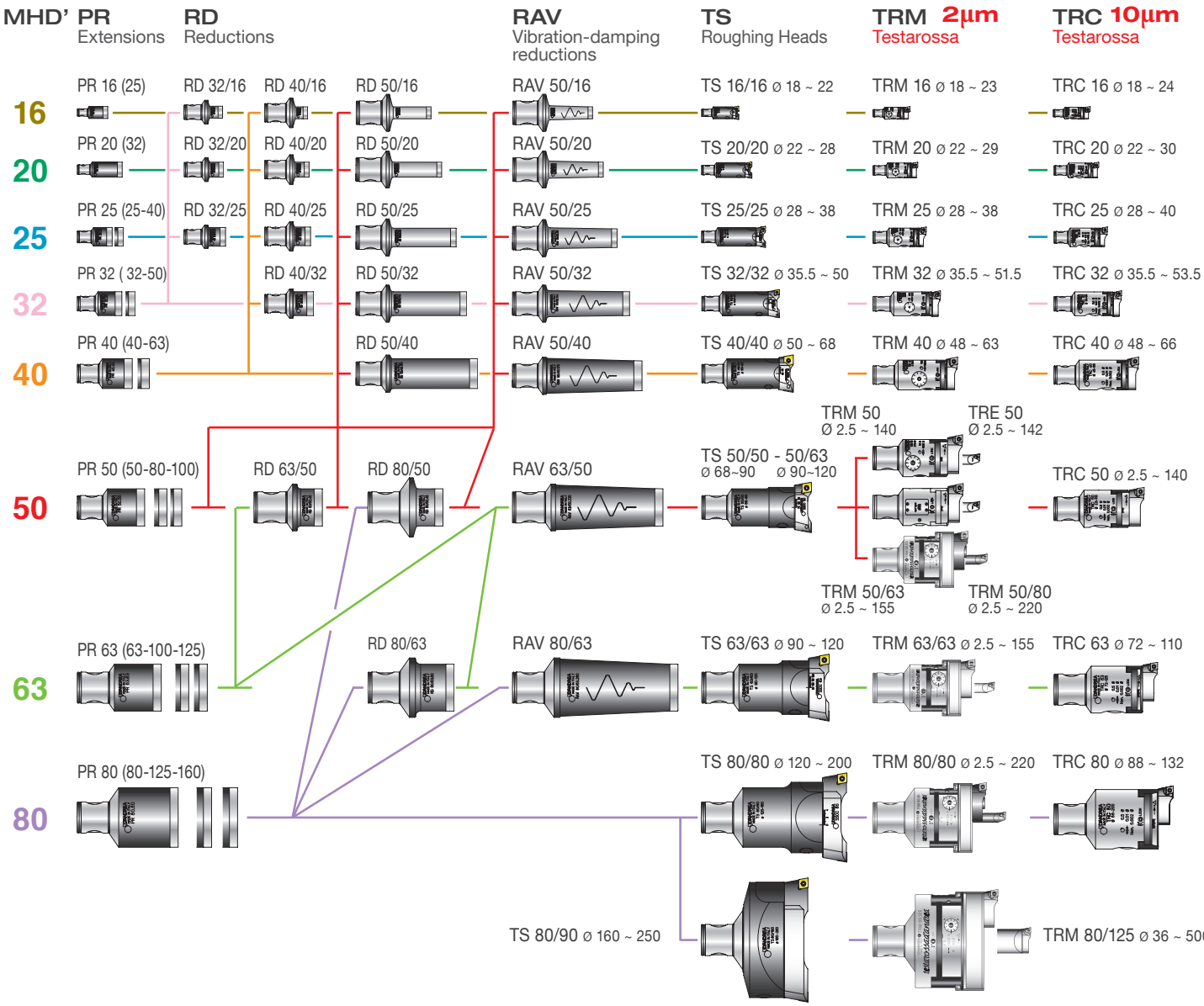

CHUCKING TOOLS

DIN 69871 AD

Cutting edge position

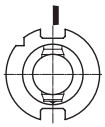

pic.1

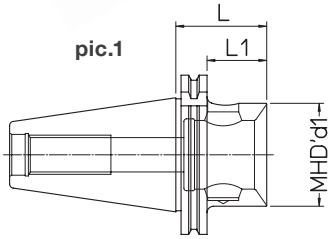

pic.2

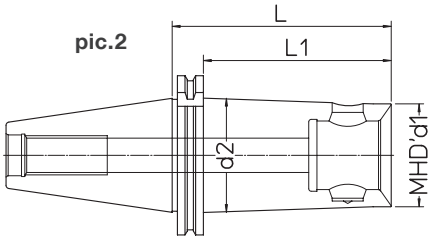

DIN	REF.	CODE	MHD’ d1	d2	L	L1	kg	pic.		
30	DIN69871-AD30 MHD’50.60	416500103020	50		60		0.6	1		
40	DIN69871-AD40 MHD’16.40	416160414020	16		40	21	0.7	1		
40	DIN69871-AD40 MHD’16.63	416160614020	16	18.5	63	44	0.8	2		
40	DIN69871-AD40 MHD’16.100	416161014020	16	21.5	100	81	0.9	2		
40	DIN69871-AD40 MHD’20.50	416200514020	20		50	31	0.8	1		
40	DIN69871-AD40 MHD’20.80	416200814020	20	25.5	80	61	0.9	2		
40	DIN69871-AD40 MHD’20.125	416201214020	20	26	125	106	1	2		
40	DIN69871-AD40 MHD’25.50	416250514020	25		50	31	0.9	1		
40	DIN69871-AD40 MHD’25.80	416250814020	25	28	80	61	1	2		
40	DIN69871-AD40 MHD’25.125	416251214020	25	31	125	106	1.1	2		
40	DIN69871-AD40 MHD’32.50	416320514020	32		50	31	1	1		
40	DIN69871-AD40 MHD’32.80	416320814020	32	34.5	80	61	1.1	2		
40	DIN69871-AD40 MHD’32.125	416321214020	32	39	125	106	1.2	2		
40	DIN69871-AD40 MHD’40.45	416400104020	40		45	26	0.5	1		
40	DIN69871-AD40 MHD’40.120	416401214020	40	44.5	120	101	1.4	2		
40	DIN69871-AD40 MHD’50.48	416500104020	50		48	29	0.9	1		
40	DIN69871-AD40 MHD’50.120	416501214020	50		120	101	1.7	1		
40	DIN69871-AD40 MHD’63.80	416630104020	63		80		1.5	1		
50	DIN69871-AD50 MHD’50.48	416500105020	50		48	29	2.5	1		
50	DIN69871-AD50 MHD’50.120	416501215020	50	60	120	101	3.5	2		
50	DIN69871-AD50 MHD’63.56	416630105020	63		56	37	2.8	1		
50	DIN69871-AD50 MHD’63.150	416631515020	63	70	150	131	5	2		
50	DIN69871-AD50 MHD’80.62	416800105020	80		62	43	3.4	1		
50	DIN69871-AD50 MHD’80.180	416801815020	80		180	161	7.6	1		

B-shape arbors – on request

DIN 69871 FC AD FACE CONTACT

Cutting edge position

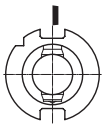

pic.1

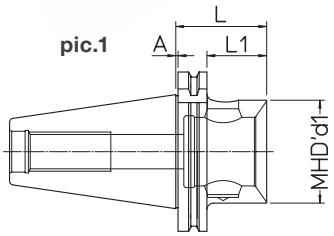

pic.2

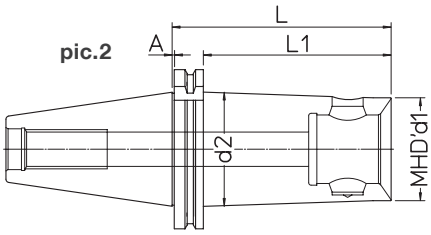

DIN	REF.	CODE	MHD’ d1	d2	A	L	L1	kg	pic.		
40	DIN69871-AD40 FC MHD’50.48	416500104020F	50		1	48	29	0.9	1		
40	DIN69871-AD40 FC MHD’50.120	416501214020F	50		1	120	101	1.7	1		
40	DIN69871-AD40 FC MHD’63.80	416630104020F	63		1	80		1.5	1		
50	DIN69871-AD50 FC MHD’50.48	416500105020F	50		1.5	48	29	2.5	1		
50	DIN69871-AD50 FC MHD’50.120	416501215020F	50	59	1.5	120	101	3.5	2		
50	DIN69871-AD50 FC MHD’50.200	416502015020F	50	68	1.5	200	181	6.1	2		
50	DIN69871-AD50 FC MHD’63.56	416630105020F	63		1.5	56	37	2.8	1		
50	DIN69871-AD50 FC MHD’63.150	416631515020F	63	75.5	1.5	150	131	5.2	2		
50	DIN69871-AD50 FC MHD’63.250	416632515020F	63	80	1.5	250	231	7.1	2		
50	DIN69871-AD50 FC MHD’80.62	416800105020F	80		1.5	62	43	3.4	1		
50	DIN69871-AD50 FC MHD’80.180	416801815020F	80		1.5	180	161	6.9	1		
50	DIN69871-AD50 FC MHD’80.300	416803015020F	80		1.5	300	281	9.2	1		

B-shape arbors – on request

Manufactured according to DIN 69871 and MAS 403 BT standards,
made in case-hardened, tempered and grinded steel. BALANCING UP TO 8000 RPM.

MAS 403 BT AD

Cutting edge position

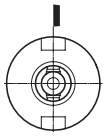

pic.1

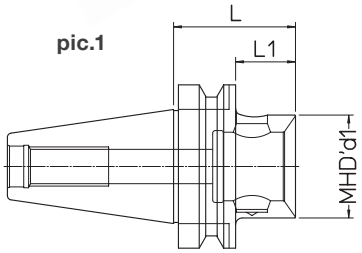

pic.2

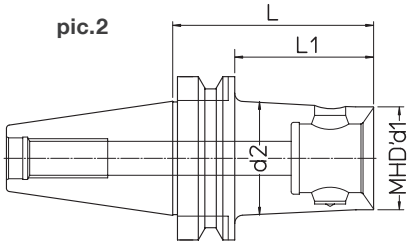

BT	REF.	CODE	MHD' d1	d2	L	L1	kg	pic.
30	**MAS403 BT30-AD MHD'50.60**	416500103030	50		60		0.7	**1**
40	**MAS403 BT40-AD MHD'16.45**	416160414030	16		45	18	0.8	**1**
40	**MAS403 BT40-AD MHD'16.63**	416160614030	16	17	63	36	0.9	**2**
40	**MAS403 BT40-AD MHD'16.100**	416161014030	16	19.5	100	73	1	**2**
40	**MAS403 BT40-AD MHD'20.50**	416200514030	20		50	23	0.9	**1**
40	**MAS403 BT40-AD MHD'20.80**	416200814030	20	22	80	53	1	**2**
40	**MAS403 BT40-AD MHD'20.125**	416201214030	20	25	125	98	1.1	**2**
40	**MAS403 BT40-AD MHD'25.50**	416250514030	25		50	23	1	**1**
40	**MAS403 BT40-AD MHD'25.80**	416250814030	25	26.5	80	53	1.1	**2**
40	**MAS403 BT40-AD MHD'25.125**	416251214030	25	29.5	125	98	1.2	**2**
40	**MAS403 BT40-AD MHD'32.50**	416320514030	32			23	1.1	**1**
40	**MAS403 BT40-AD MHD'32.80**	416320814030	32	33	80	53	1.2	**2**
40	**MAS403 BT40-AD MHD'32.125**	416321214030	32	36	125	98	1.4	**2**
40	**MAS403 BT40 AD MHD'40.45**	416400104030	40		45	18	0.6	**1**
40	**MAS403 BT40-AD MHD'40.120**	416401214030	40	44.5	120	93	0.9	**2**
40	**MAS403 BT40-AD MHD'50.48**	416500104030	50		48	21	0.9	**1**
40	**MAS403 BT40-AD MHD'50.120**	416501214030	50		120	93	1.9	**2**
40	**MAS403 BT40-AD MHD'63.66**	416630104030	63		66		1.2	**1**
50	**MAS403 BT50-AD MHD'50.66**	416500105030	50		66	28	3.3	**1**
50	**MAS403 BT50-AD MHD'50.120**	416501215030	50	60	120	82	4.2	**2**
50	**MAS403 BT50-AD MHD'63.75**	416630105030	63		75	37	3.7	**1**
50	**MAS403 BT50-AD MHD'63.150**	416631515030	63	70	150	112	5.8	**2**
50	**MAS403 BT50-AD MHD'80.75**	416800105030	80		75	37	4	**1**
50	**MAS403 BT50-AD MHD'80.180**	416801815030	80		180	142	7.5	**2**

B-shape arbors – on request

MAS 403 BT FC AD FACE CONTACT

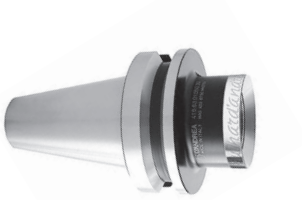

Cutting edge position

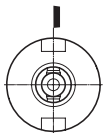

pic.1

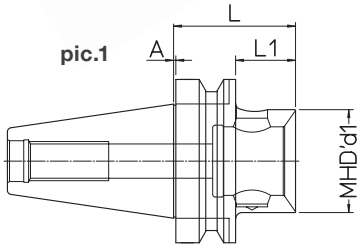

pic.2

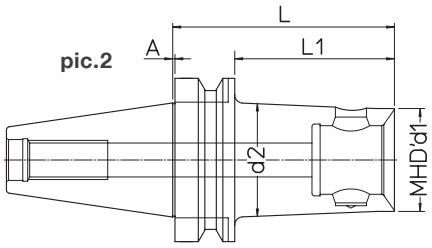

BT	REF.	CODE	MHD' d1	d2	A	L	L1	kg	pic.
40	**MAS403 BT40-AD FC MHD'50.48**	416500104030F	50		1	48	21	0.9	**1**
40	**MAS403 BT40-AD FC MHD'50.120**	416501214030F	50		1	120	93	1.9	**1**
40	**MAS403 BT40-AD FC MHD'63.66**	416630104030F	63		1	66		1.2	**1**
50	**MAS403 BT50-AD FC MHD'50.66**	416500105030F	50		1.5	66	28	3.2	**1**
50	**MAS403 BT50-AD FC MHD'50.120**	416501215030F	50	57.5	1.5	120	82	4.2	**2**
50	**MAS403 BT50-AD FC MHD'50.200**	416502015030F	50	66	1.5	200	162	4.5	**2**
50	**MAS403 BT50-AD FC MHD'63.75**	416630105030F	63		1.5	75	37	3.7	**1**
50	**MAS403 BT50-AD FC MHD'63.150**	416631515030F	63	73.5	1.5	150	112	5.8	**2**
50	**MAS403 BT50-AD FC MHD'63.250**	416632515030F	63	84	1.5	250	212	6.1	**2**
50	**MAS403 BT50-AD FC MHD'80.75**	416800105030F	80		1.5	75	37	4	**1**
50	**MAS403 BT50-AD FC MHD'80.180**	416801815030F	80		1.5	180	142	7.5	**1**
50	**MAS403 BT50-AD FC MHD'80.300**	416803015030F	80		1.5	300	262	9.2	**1**

B-shape arbors – on request

DIN 69893 HSK-A

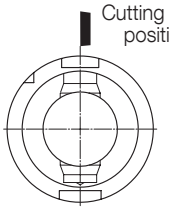

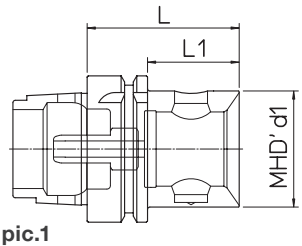

pic.1

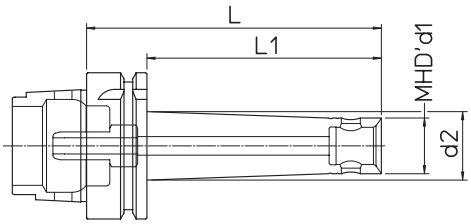

pic.2

Supplied with coolant tube

HSK-A	REF.	CODE	MHD’ d1	d2	L	L1	kg	pic.
50	HSK-A50 MHD’50.66	416501505020	50		66		0.6	1
63	HSK-A63 MHD’16.100	416161056320	16	19.5	100	74	0.8	2
63	HSK-A63 MHD’20.125	416201256320	20	25	125	99	0.9	2
63	HSK-A63 MHD’25.125	416251256320	25	29.5	125	99	1	2
63	HSK-A63 MHD’32.90	416320956320	32	33.5	90	64	1	2
63	HSK-A63 MHD’32.125	416321256320	32	36	125	99	1.2	2
63	HSK-A63 MHD’40.60	416401506320	40		60	34	0.7	1
63	HSK-A63 MHD’40.120	416401506328	40	46	120	94	1.4	2
63	HSK-A63 MHD’50.66	416501506320	50		66	40	0.9	1
63	HSK-A63 MHD’50.120	416501506328	50		120	94	1.7	1
63	HSK-A63 MHD’63.75	416631506320	63		75		1.1	1
80	HSK-A80 MHD’50.70	416501508020	50		70	44	1.5	1
80	HSK-A80 MHD’63.80	416631508020	63		80	54	1.8	1
100	HSK-A100 MHD’50.72	416501510020	50		72	43	2.4	1
100	HSK-A100 MHD’50.120	416501510028	50	60	120	91	3.2	2
100	HSK-A100 MHD’63.82	416631510020	63		82	53	2.7	1
100	HSK-A100 MHD’63.150	416631510028	63	70	150	121	4.5	2
100	HSK-A100 MHD’80.88	416801510020	80		88	59	3	1
100	HSK-A100 MHD’80.180	416801510028	80		180	151	6.5	1

DIN 2080-A ‘OTT’

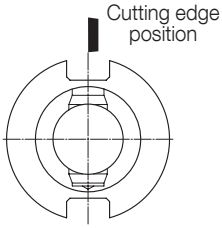

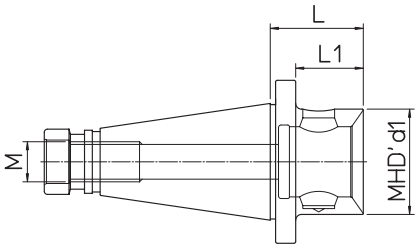

DIN	REF.	CODE	MHD’ d1	L	L1	M	kg
30	DIN2080-A30 MHD’50.58	416500103000	50	58		M12	0.6
40	DIN2080-A40 MHD’50.48	416500104000	50	48	36.5	M16	0.9
40	DIN2080-A40 MHD’63.60	416630104000	63	60		M16	1.2
50	DIN2080-A50 MHD’50.48	416500105000	50	48	33	M24	2.6
50	DIN2080-A50 MHD’63.56	416630105000	63	56	41	M24	2.7
50	DIN2080-A50 MHD’80.60	416800105000	80	60	45	M24	3.2

ANSI/CAT AD

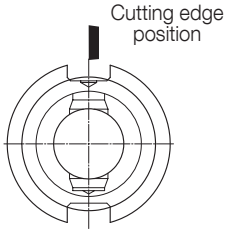

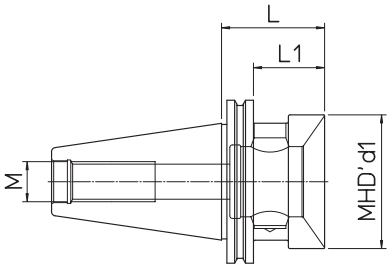

ANSI/CAT	REF.	CODE	MHD’ d1	L	L1	M	kg
40	ANSI/CAT40 MHD’50.66	416500104040	50	66	47	M16	1.1
40	ANSI/CAT40 MHD’63.100	416630104040	63	100		M16	1.9
50	ANSI/CAT50 MHD’50.48	416500105040	50	48	29	M24	2.4
50	ANSI/CAT50 MHD’63.56	416630105040	63	56	37	M24	2.9
50	ANSI/CAT50 MHD’80.62	416800105040	80	62	43	M24	3.2

BR STEEL BARS

MHD'16 - MHD'20

MHD'32 - MHD'50

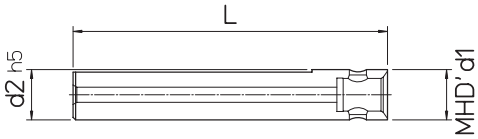

pic.1

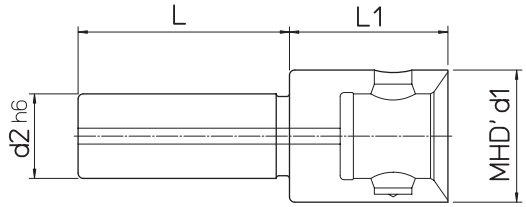

pic.2

REF.	CODE	MHD' d1	L	L1	d2	kg	pic.		
BR 16/16.100	657081601001	16	100		16	0.15	1		
BR 20/20.125	657082001251	20	125		20	0.3	1		
BR 25/32.35	416320802500	32	65	35	25	0.7	2		
BR 32/50.60	416500803200	50	80	60	32	1	2		

BMD CARBIDE BARS

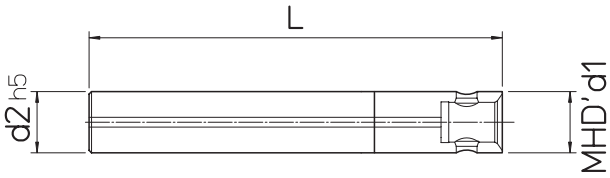

MONOforce
see p.50-51

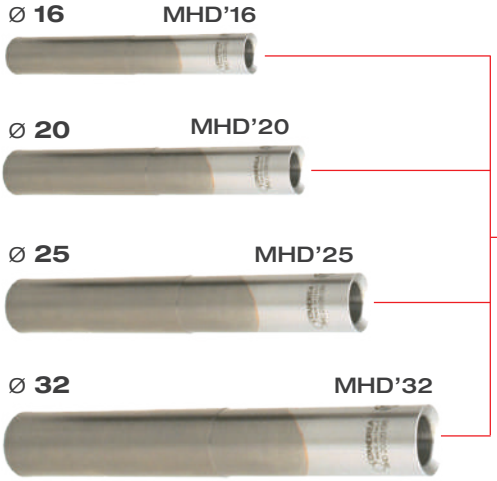

REF.	CODE	MHD' d1	d2	L	kg		
BMD 16/16.110	657081601105	16	16	110	0.3		
BMD 16/16.140	657081601405	16	16	140	0.4		
BMD 16/16.170	657081601705	16	16	170	0.5		
BMD 20/20.135	657082001355	20	20	135	0.6		
BMD 20/20.170	657082001705	20	20	170	0.75		
BMD 20/20.210	657082002105	20	20	210	0.9		
BMD 25/25.160	657082501605	25	25	160	1		
BMD 25/25.205	657082502055	25	25	205	1.3		
BMD 25/25.255	657082502555	25	25	255	1.6		
BMD 32/32.195	657083201955	32	32	195	2.1		
BMD 32/32.250	657083202505	32	32	250	2.8		
BMD 32/32.315	657083203155	32	32	315	3.5		

PR EXTENSIONS

For each MHD size there are extensions of different lengths that can be used to achieve the desired machining depths.

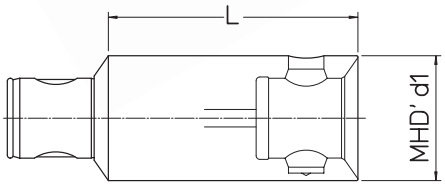

REF.	CODE	MHD' d1	L	kg
PR 16.25	656901600250	16	25	0.04
PR 20.32	656902000320	20	32	0.07
PR 25.25	656902500250	25	25	0.09
PR 25.40	656902500400	25	40	0.15
PR 32.32	656903200320	32	32	0.2
PR 32.50	656903200500	32	50	0.3
PR 40.40	656904000400	40	40	0.4
PR 40.63	656904000630	40	63	0.6
PR 50.50	656905000500	50	50	0.7
PR 50.80	656905000800	50	80	1.1
PR 50.100	656905001000	50	100	1.5
PR 63.63	656906300630	63	63	1.4
PR 63.100	656906301000	63	100	2.2
PR 63.125	656906301250	63	125	2.9
PR 80.80	656908000800	80	80	3
PR 80.125	656908001250	80	125	4.6
PR 80.160	656908001600	80	160	6.1

RD REDUCTIONS

The reductions allow the use of MHD components of a smaller size thereby optimising the composition of the tool according to the overall dimensions.

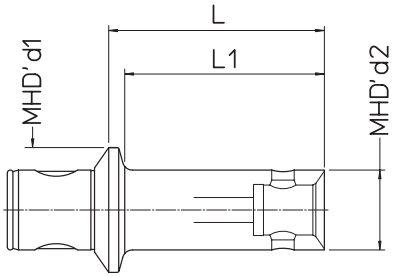

REF.	CODE	MHD' d1	MHD' d2	L	L1	kg
RD 20/16.20	657002000160	20	16	20	16	0.05
RD 25/16.20	657002500160	25	16	20	15	0.07
RD 25/20.25	657002500200	25	20	25	20	0.08
RD 32/16.24	657003200160	32	16	24	18	0.10
RD 32/20.25	657003200200	32	20	25	20	0.12
RD 32/25.28	657003200250	32	25	28	23	0.14
RD 40/16.24	657004000160	40	16	24	17	0.18
RD 40/20.26	657004000200	40	20	26	20	0.2
RD 40/25.28	657004000250	40	25	28	22	0.25
RD 40/32.32	657004000320	40	32	32	27	0.3
RD 50/16.24	657005000160	50	16	24	15	0.34
RD 50/16.40	657005000162	50	16	40	32	0.2
RD 50/16.74	657005000163	50	16	74	65	0.25
RD 50/20.26	657005000200	50	20	26	18	0.37
RD 50/20.70	657005000202	50	20	70	62	0.3
RD 50/20.93	657005000203	50	20	93	85	0.35
RD 50/25.28	657005000250	50	25	28	21	0.4
RD 50/25.87	657005000252	50	25	87	80	0.6
RD 50/25.117	657005000253	50	25	117	110	0.65
RD 50/32.32	657005000320	50	32	32	25	0.45
RD 50/32.87	657005000322	50	32	87	80	0.75
RD 50/32.144	657005000323	50	32	144	137	1
RD 50/40.36	657005000400	50	40	36	30	0.5
RD 50/40.87	657005000402	50	40	87	80	0.9
RD 50/40.176	657005000403	50	40	176	170	1.8
RD 63/50.40	657006300500	63	50	40	34	0.9
RD 80/50.45	657008000500	80	50	45	36	1.2
RD 80/63.60	657008000630	80	63	60	52	1.7

RAV VIBRATION-DAMPING

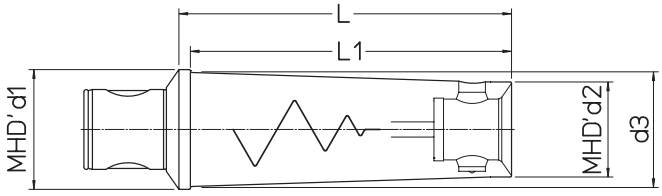

Anti-vibration reductions for deep or heavy-duty machining.

REF.	CODE	MHD' d1	MHD' d2	d3	L	L1	kg
RAV 50/16.74	657005000165	50	16	17.5	74	65	0.4
RAV 50/20.93	657005000205	50	20	21.5	93	85	0.5
RAV 50/25.117	657005000255	50	25	27	117	110	0.8
RAV 50/32.144	657005000325	50	32	35	144	138	1.4
RAV 50/40.176	657005000405	50	40	47	176	170	2.5
RAV 63/50.220	657006300505	63	50	60	220	214	5.2
RAV 80/63.280	657008000635	80	63	77	280	272	10.6

BORING

TS 16 ~ 80 Ø 18 ~ 250

Simple and extremely rigid roughing heads, thanks to the serrated surfaces between the head body and the bit holders. The constant distance between the bit holder clamping screw and the cutting edge guarantees the stability of the system.

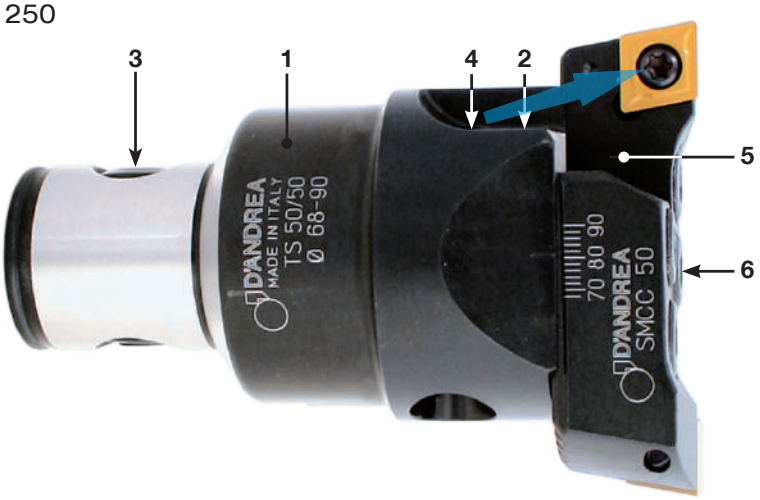

1. Body
2. Setting screws
3. Expanding pin
4. Coolant outlets **Max BAR 40**
5. Bit holders
6. Tools clamp screws

TS 16/16 Ø 18 ~ 22

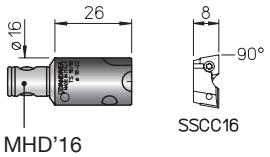

TS 20/20 Ø 22 ~ 28

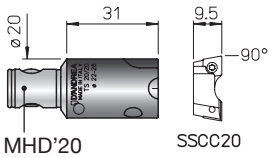

TS 25/25 Ø 28 ~ 38

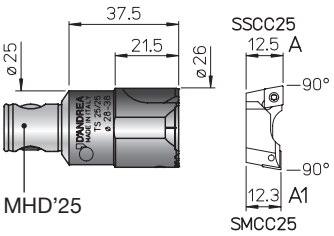

TS 32/32 Ø 35.5 ~ 50

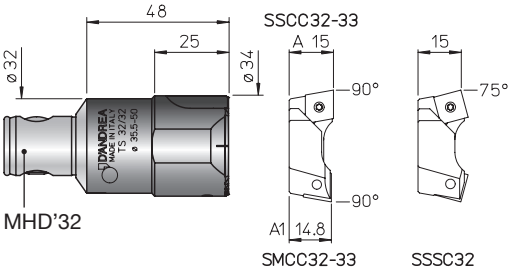

TS 40/40 Ø 50 ~ 68

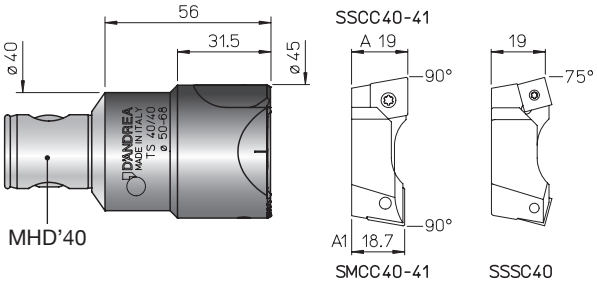

TS 50/50 Ø 68 ~ 90

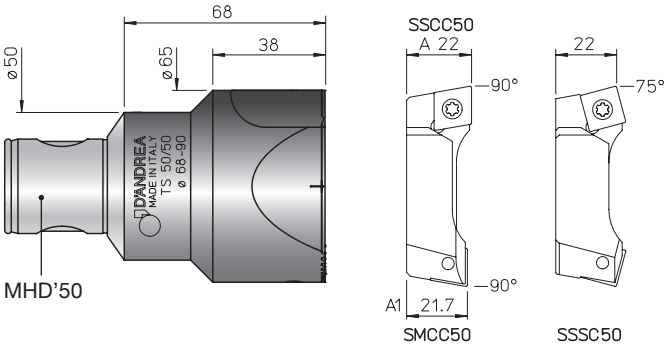

TS 50/63 - TS 63/63 Ø 90 ~ 120

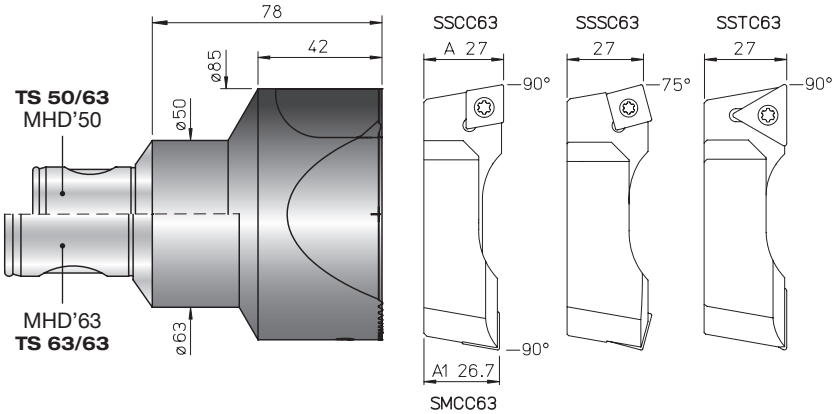

REF.	CODE	kg		
TS 16/16	455501600340	0.05		
TS 20/20	455502000400	0.09		
TS 25/25	455502500510	0.2		
TS 32/32	455503200638	0.35		
TS 40/40	455504040070	0.7		

REF.	CODE	kg		
TS 50/50	455505050090	1.5		
TS 50/63	455505063100	2		
TS 63/63	455506363100	3		
TS 80/80	455508080110	5.3		
TS 80/90	455508090090	6.3		

TS 80/80 Ø 120 ~ 200

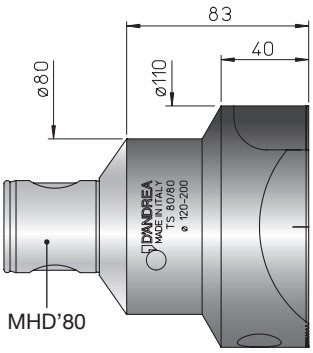

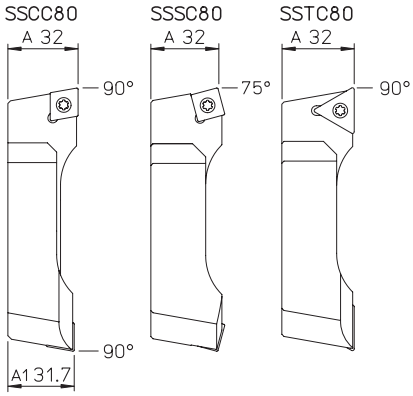

Ø **120~160**

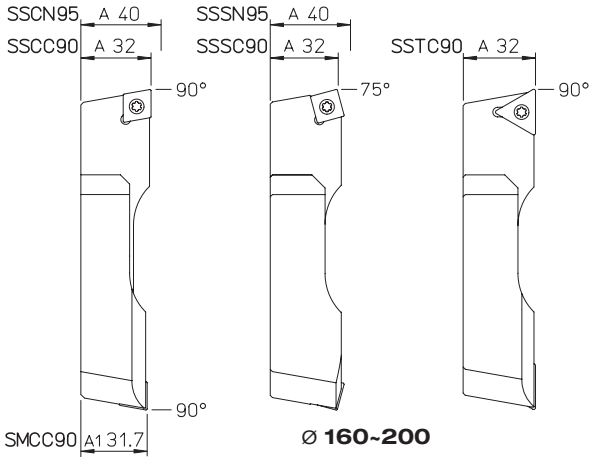

Ø **160~200**

TS 80/90 Ø 160 ~ 250

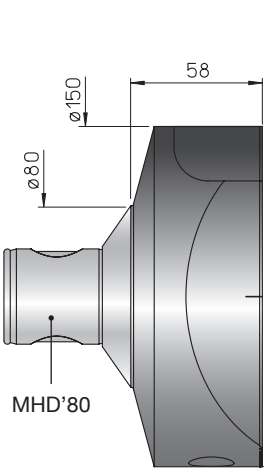

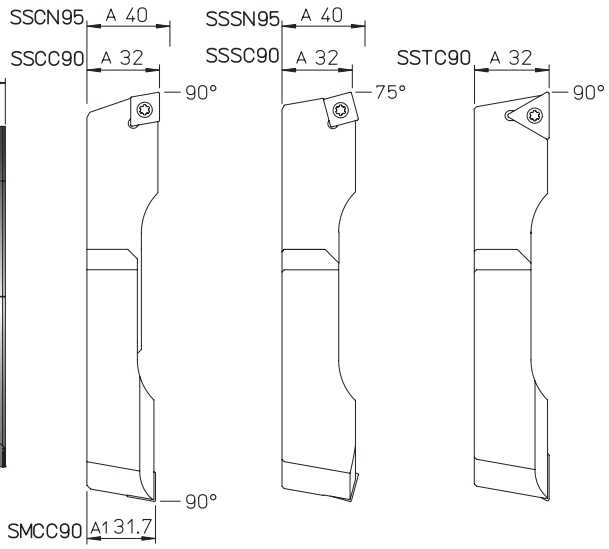

Ø **160~250**

USE TS for ROUGHING end SEMI-FINISHING operations

Cutting edges might be adjusted on a pre-setting bench and TS heads can be used in three different configurations, with a single cutting edge **(pic. 3)** or misaligned ones **(pic.2)** half the feed.

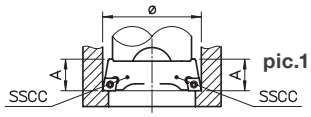

pic.1

pic.1 with two SSCC bit holders aligned and on the same diameter for roughing operations with high feedrate.

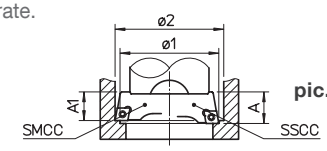

pic.2

pic. 2 with one SSCC bit holder and one SMCC bit holder staggered and on a different diameter for roughing operations with high depth of cut.

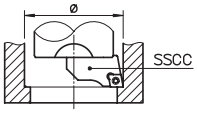

pic.3

pic.3 with a single bit holder for roughing or semi-finishing operations.

REF.	CODE		TS	TORX T	kg
SSCC 16	470500516201	CCMT 0602..	25	08	0.003
SSCC 20	470500520201	CCMT 0602..	25	08	0.006
SSCC 25	470500525201	CCMT 0602..	25	08	0.1
SSCC 32	470500532201	CCMT 0602..	25	08	0.02
SSCC 33	470500532204	CCMT 09T3..	4	15	0.025
SSCC 40	470500540201	CCMT 09T3..	4	15	0.06
SSCC 41	470500540204	CCMT 1204..	5	25	0.06
SSCC 50	470500550204	CCMT 1204..	5	25	0.1
SSCC 63	470500563201	CCMT 1204..	5	25	0.2
SSCC 80	470500580201	CCMT 1204..	5	25	0.5
SSCC 90	470500590201	CCMT 1204..	5	25	0.7
SSCN 95	470500595201	CNM. 1906..			0.9
SSTC 63	470500563206	TCMT 2204..	5	25	0.2
SSTC 80	470500580206	TCMT 2204..	5	25	0.5
SSTC 90	470500590206	TCMT 2204..	5	25	0.7

REF.	CODE		TS	TORX T	kg
SMCC 25	470500525203	CCMT 0602..	25	08	0.01
SMCC 32	470500532203	CCMT 0602..	25	08	0.02
SMCC 33	470500532205	CCMT 09T3..	4	15	0.025
SMCC 40	470500540203	CCMT 09T3..	4	15	0.06
SMCC 41	470500540205	CCMT 1204..	5	25	0.06
SMCC 50	470500550205	CCMT 1204..	5	25	0.1
SMCC 63	470500563203	CCMT 1204..	5	25	0.2
SMCC 80	470500580203	CCMT 1204..	5	25	0.5
SMCC 90	470500590203	CCMT 1204..	5	25	0.7
SSSC 32	470500532202	SCMT 09T3..	4	15	0.02
SSSC 40	470500540202	SCMT 09T3..	4	15	0.06
SSSC 50	470500550202	SCMT 1204..	5	25	0.1
SSSC 63	470500563202	SCMT 1204..	5	25	0.2
SSSC 80	470500580202	SCMT 1204..	5	25	0.5
SSSC 90	470500590202	SCMT 1204..	5	25	0.7
SSSN 95	470500595202	SNM. 1906..	**p.57**		0.9

• For back-facing machining see p.24

TRM 16 ~ 125 Ø 2.5 ~ 500

TESTAROSSA MICROMETRIC

TRM 16 RPM 12.000
TRM 20 RPM 12.000
TRM 25 RPM 10.000
TRM 32 RPM 10.000
TRM 40 RPM 8.000
TRM 50 RPM 8.000
TRM 63 RPM 6.000
TRM 80 RPM 5.000
TRM 125 RPM 4.000

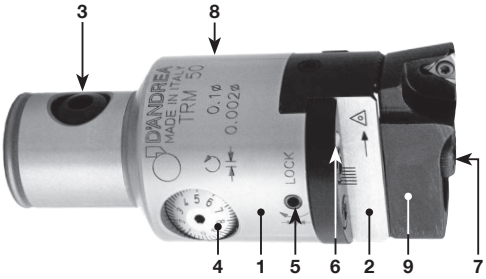

2 µm

TRM heads allow high precision machining and excellent surface finish in the **IT6** tolerance class.
The adjustment sensitivity of **1 micron** on the radius is easily readable on the vernier scale and can also be performed in the machine spindle.

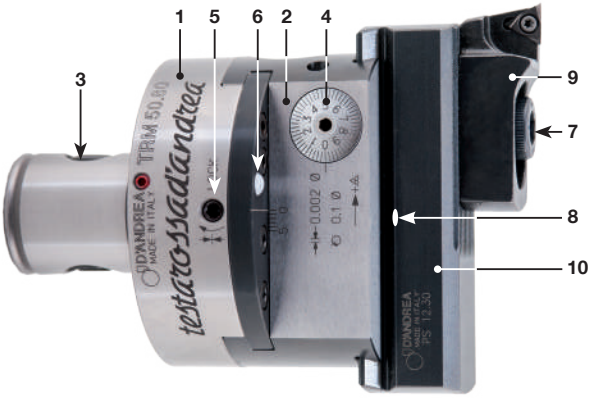

1. Body
2. Slide toolholder
3. Expanding radial pin
4. Micrometric vernier scale
5. Slide clamp screw
6. Coolant outlet
   Max BAR 40
7. Tools clamp screws
8. Oiler
9. Bit holder
10. Tool holder

TRE 50 IP69K Ø 2.5 ~ 142

TESTAROSSA MICROMETRIC DIGITAL

TRE 50 69K RPM 20.000

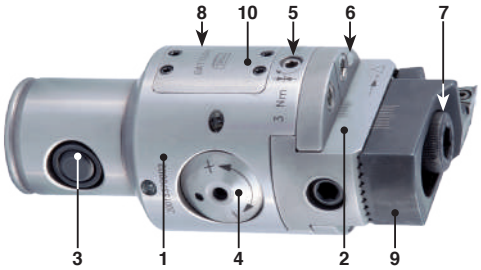

Ø 0.002 mm
.0001 inch

2 µm

TRE heads allow high precision machining and excellent surface finish in the **IT6** tolerance class.
The adjustment of **1 micron** on the radius is fast, accurate and easily readable on the integrated display.
The **TRE 50** is resistant to coolant & dust infiltrations according to the IP69K class..

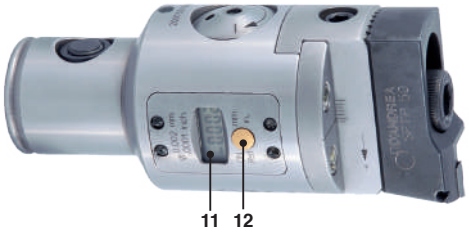

1. Body
2. Slide toolholder
3. Expanding radial pin
4. Set screw
5. Slide clamp screw
6. Coolant outlet
   Max BAR 40
7. Tools clamp screws
8. Oiler
9. Bit holder
10. Battery compartment cover
11. Digital display
12. Selection button

TRC 16 ~ 80 Ø 2.5 ~ 140

TESTAROSSA CENTESIMAL

TRC 16 RPM 12.000
TRC 20 RPM 12.000
TRC 25 RPM 10.000
TRC 32 RPM 10.000
TRC 40 RPM 8.000
TRC 50 RPM 8.000
TRC 63 RPM 6.000
TRC 80 RPM 5.000

10 µm
nonio vernier **2 µm**

TRC heads allow high precision machining and excellent surface finishes in the **IT7** tolerance class.
The adjustment of 5 micron on the radius is easily readable on the vernier scale and can also be performed in the machine spindle.

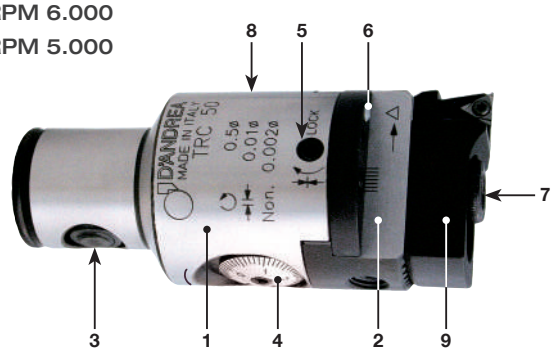

1. Body
2. Slide toolholder
3. Expanding radial pin
4. Vernier scale
5. Slide clamp screw
6. Coolant outlet
   Max BAR 40
7. Tools clamp screws
8. Oiler
9. Bit holder

TRM 16 Ø 18 ~ 23

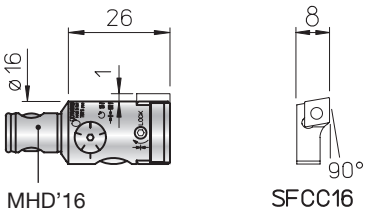

TRM 20 Ø 22 ~ 29

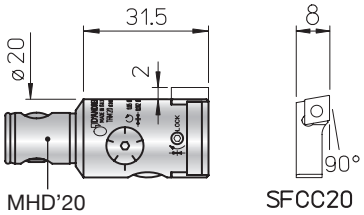

TRM 25 Ø 28 ~ 38

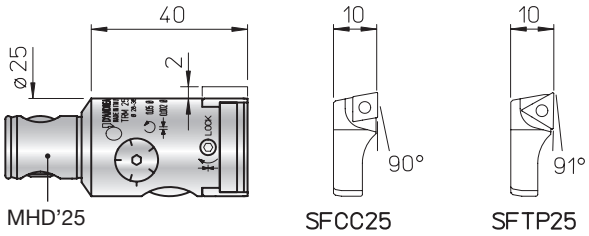

TRM 32 Ø 35.5 ~ 51.5

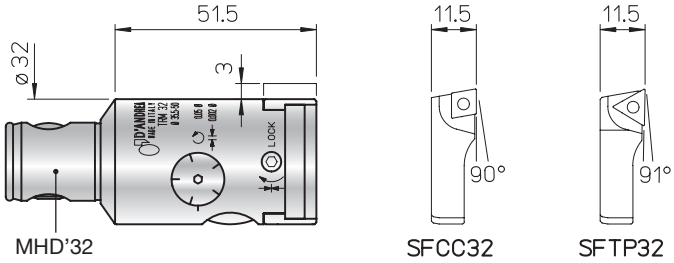

TRM 40 Ø 48 ~ 63

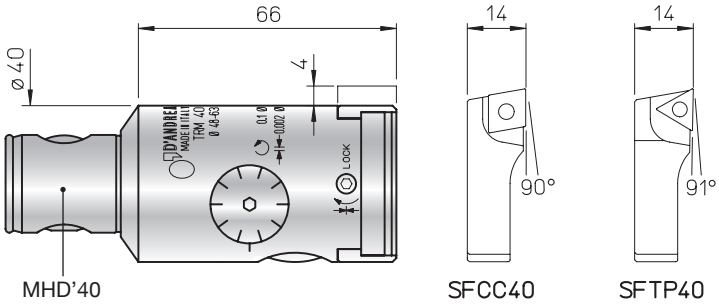

REF.	CODE	kg		
TRM 16	455001600341	0.05		
TRM 20	455002000401	0.1		
TRM 25	455002500500	0.2		
TRM 32	455003200630	0.35		
TRM 40	455004000800	0.7		

REF.	CODE			TORX T	kg		
SFCC 16	470500516002	CCGT 0602..	TS 25	08	0.003		
SFCC 20	470500520002	CCGT 0602..	TS 25	08	0.005		
SFCC 25	470500525002	CCGT 0602..	TS 25	08	0.01		
SFCC 32	470500532002	CCGT 0602..	TS 25	08	0.02		
SFCC 40	470500540002	CCGT 09T3..	TS 4	15	0.04		
SFTP 25	470500525001	TPGX 0902..	CS 250T	08	0.01		
SFTP 32	470500532001	TPGX 0902..	CS 250T	08	0.02		
SFTP 40	470500540001	TPGX 1103..	CS 300890T	08	0.04		

- For back-facing machining see p.24

TRM 50 ø 2.5 ~ 140

TRE 50 IP69K ø 2.5 ~ 142

2 µm

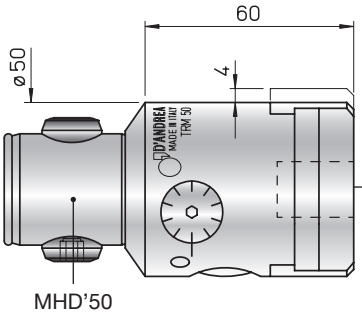

TRM 50

ø 2.5~140

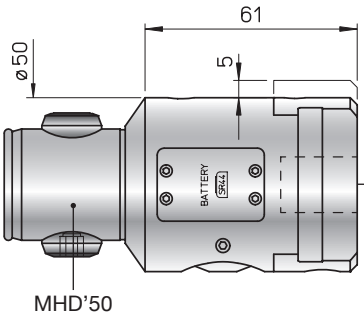

TRE 50 IP69K

ø 2.5~142

Tools | Vibration-damping | Carbide

RDC D08.16 (22, ø8, ø16)

B1.02 Ø2,5~4 (ø8, 22, 12.5, 21, 96°) — B1.04 Ø4~6 (24, 24)

	Tools	Vibration-damping	Carbide	
	22, 29, 21, ø16, 95°	22, 36	22, 45	Ø6~8
B3.06 / B5.06 / B8.06				
B3.08 / B5.08 / B8.08	36, 28	48	60	Ø8~10
B3.10 / B3.11 / B5.10 / B8.10	43, 35, 48, 40, 93°	60	75	Ø10~13
B3.12 / B5.12 / B8.12	48, 42	72	90	Ø12~14
B3.14 / B5.14 / B8.14	52, 50	84	105	Ø14~16
B3.16 / B5.16 / B8.16	58, 50	96	120	Ø16~18
B3.18	63			Ø18~22
B3.22	68			Ø22~30

ø 28~44 — TRM50 ø 28~42, TRE50 ø 28~44

ø 36~56 — TRM50 ø 36~54, TRE50 ø 36~56

53, ø25	95	10, 91°	10, 90°	11.5, 91°	11.5, 90°
P 25.63	P 25.105	SFTP25	SFCC25	SFTP32	SFCC32

ø 54~86 — TRM50 ø 54~84, TRE50 ø 54~86

ø 80~110 — TRM50 ø 80~108, TRE50 ø 80~110

ø 105~142 — TRM50 ø 105~140, TRE50 ø 105~142

BM10	19, 91°	19, 90°	21, 91°	21, 90°	14.5, ø75	14.5, ø100	
SFTP50	SFCC50	SFTP51	SFCC51	PS31.24	PS32.24	CW32	

REF.	CODE	kg
TRM 50	455005000500	1
TRE 50 IP69K	455200500501	1.1
D08.16	200560116082	0.02
P25.63	435116250631	0.5
P25.105	435116251051	0.8
PS 31.24	433024140751	0.19
PS 32.24	433024141001	0.2
CW 32	392011003201	0.07

KIT K01 TRM 50 Ø 6 ~ 140

1 TRM 50
1 B3.06
1 B3.08
1 B3.11
1 B3.16
1 B3.22

1 SFTP 25
1 SFTP 32
1 SFTP 50
1 P 25.63
1 PS 31.24
1 PS 32.24
1 CW 32

5 TPGX 090202L DC100
1 TPGX 110302L DC100
2 WCGT 020102L DC10

REF.	CODE	kg		
KIT K01 TRM 50	655005010510	3.1		

KIT K01 TRE 50 IP69K Ø 6 ~ 142

1 TRE 50
1 B3.06
1 B3.08
1 B3.11
1 B3.16
1 B3.22

1 SFTP 25
1 SFTP 32
1 SFTP 50
1 P 25.63
1 PS 31.24
1 PS 32.24
1 CW 32

5 TPGX 090202L DC100
1 TPGX 110302L DC100
2 WCGT 020102L DC10

REF.	CODE	kg		
KIT K01 TRE 50 IP69K	655200500504	3.1		

KIT K01 TRM 50 - TRE 50 IP69K

Working Range

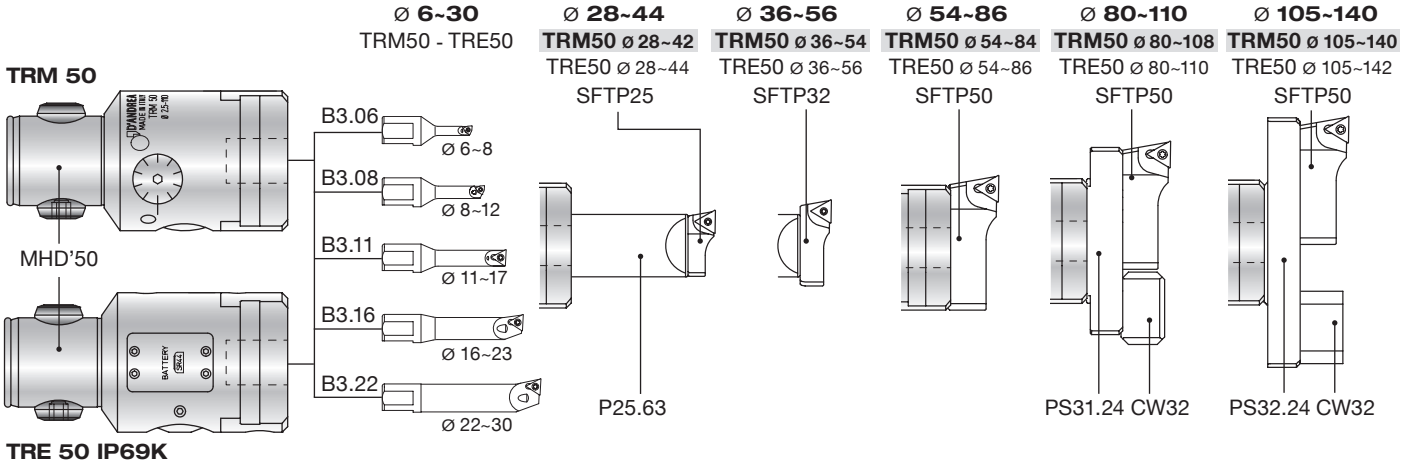

REF.	CODE			TORX T	kg		
B1.02	572010502001				0.02		
B1.04	572010504001				0.02		
B3.06	572010506001	WCGT0201..	TS 21	06	0.035		
B3.08	572010508001	WCGT0201..	TS 211	06	0.4		
B3.10	572010510001	TPGX0902..	CS 250 T	08	0.05		
B3.11	572010511001	TPGX0902..	CS 250 T	08	0.055		
B3.12	572010512001	TPGX0902..	CS 250 T	08	0.06		
B3.14	572010514001	TPGX0902..	CS 250 T	08	0.07		
B3.16	572010516001	TPGX0902..	CS 250 T	08	0.07		
B3.18	572010518001	TPGX0902..	CS 250 T	08	0.1		
B3.22	572010522001	TPGX0902..	CS 250 T	08	0.1		

REF.	CODE			TORX T	kg		
B5.06	572010506105	WCGT0201..	TS 21	06	0.075		
B5.08	572010508105	WCGT0201..	TS 211	06	0.09		
B5.10	572010510105	TPGX0902..	CS 250 T	08	0.1		
B5.12	572010512105	TPGX0902..	CS 250 T	08	0.1		
B5.14	572010514105	TPGX0902..	CS 250 T	08	0.2		
B5.16	572010516105	TPGX0902..	CS 250 T	08	0.3		
B8.06	572010506108	WCGT0201..	TS 21	06	0.065		
B8.08	572010508108	WCGT0201..	TS 211	06	0.08		
B8.10	572010510108	TPGX0902..	CS 250 T	08	0.1		
B8.12	572010512108	TPGX0902..	CS 250 T	08	0.2		
B8.14	572010514108	TPGX0902..	CS 250 T	08	0.2		
B8.16	572010516108	TPGX0902..	CS 250 T	08	0.3		

REF.	CODE			TORX T	kg		
SFTP25	470500525001	TPGX0902..	CS 250T	08	0.01		
SFTP32	470500532001	TPGX0902..	CS 250T	08	0.02		
SFTP50	470500550001	TPGX1103..	CS300890T	08	0.08		
SFTP51	470500550003	TCMT16T3..	TS 4	15	0.09		

REF.	CODE			TORX T	kg		
SFCC25	470500525002	CCGT0602..	TS 25	08	0.01		
SFCC32	470500532002	CCGT0602..	TS 25	08	0.02		
SFCC50	470500550002	CCGT09T3..	TS 4	15	0.08		
SFCC51	470500550004	CCMT1204..	TS 5	25	0.09		

- For back-facing machining see p.24

TRM 50/63 - TRM 63/63
Ø 2.5 ~ 155

TRM 50/80 - TRM 80/80
Ø 2.5 ~ 220

2 µm

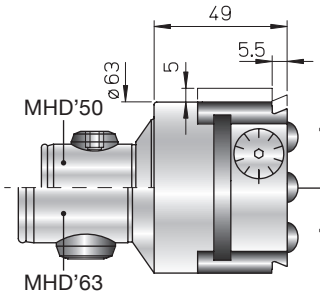

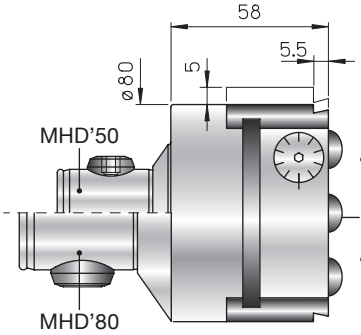

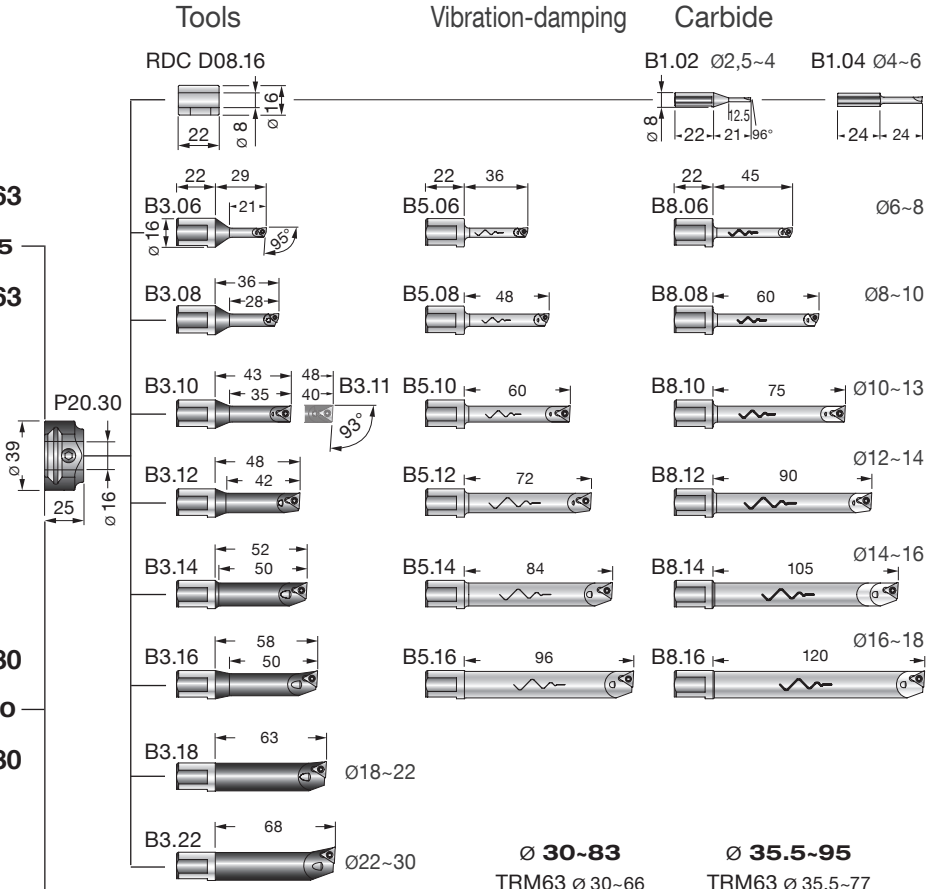

REF.	CODE	kg
TRM 50/63	455005000631	1.1
TRM 63/63	455006300631	1.5
TRM 50/80	455005000801	2
TRM 80/80	455008000801	2.5
D08.16	200560116082	0.02
P20.30	431030160300	0.2
P02.30	431030250400	0.3
P03.30	431030250700	0.4
P04.30	431030251150	0.7
PS 11.30	433030260750	0.4
PS 12.30	433030260950	0.5
PS 13.30	433030261400	0.7

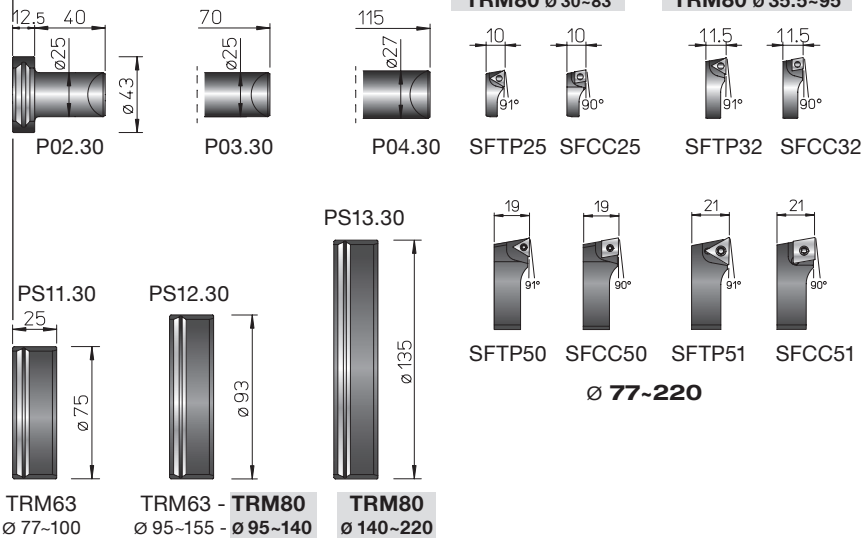

KIT K01 TRM 50/63 - 63/63

Ø 6 ~ 155

1 TRM 50/63 - 63/63

1 P20.30
1 PS11.30
1 PS12.30
1 P02.30
1 P03.30
1 B3.06
1 B3.08
1 B3.11
1 B3.16
1 B3.22
1 SFTP25
1 SFTP32
1 SFTP50

5 TPGX 090202L DC100
1 TPGX 110302L DC100
2 WCGT 020102L DC 10

REF.	CODE	kg		
KIT K01 TRM50/63	655005010633	3.9		
KIT K01 TRM63/63	655006310633	4.2		

KIT K01 TRM 50/80 - 80/80

Ø 6 ~ 220

1 TRM 50/80 - 80/80

1 P20.30
1 PS12.30
1 PS13.30
1 P02.30
1 P03.30
1 P04.30
1 B3.06
1 B3.08
1 B3.11
1 B3.16
1 B3.22
1 SFTP25
1 SFTP32
1 SFTP50

5 TPGX 090202L DC100
1 TPGX 110302L DC100
2 WCGT 020102L DC 10

REF.	CODE	kg		
KIT K01 TRM50/80	655005010802	6.2		
KIT K01 TRM80/80	655008010802	6.6		

KIT K01 TRM 50/63 - 63/63 — Working Range

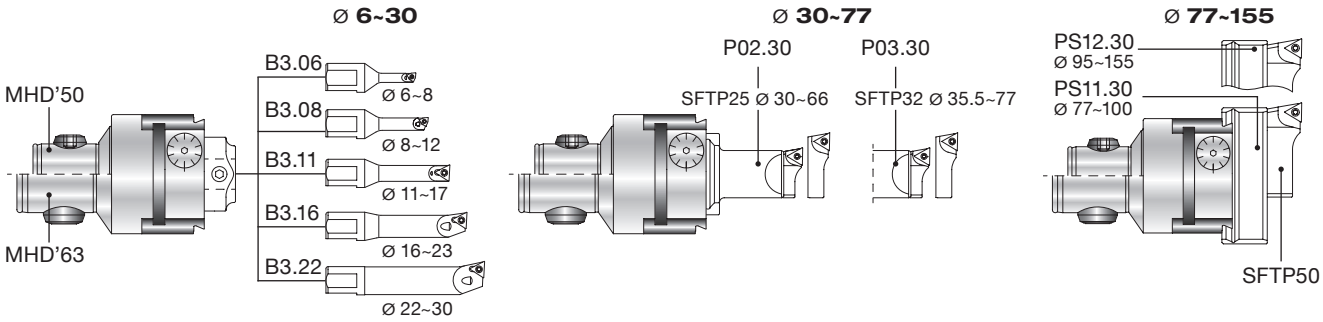

KIT K01 TRM 50/80 - 80/80 — Working Range

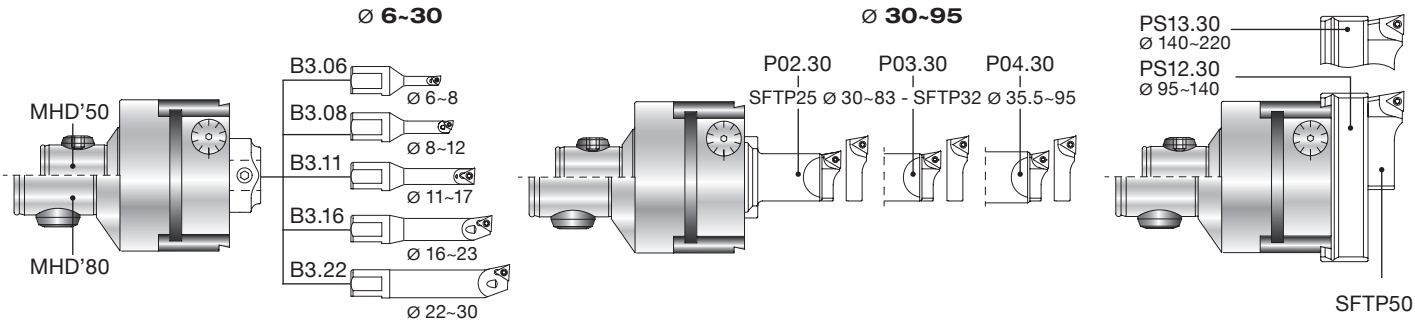

REF.	CODE			TORX T	kg		
B1.02	572010502001				0.02		
B1.04	572010504001				0.02		
B3.06	572010506001	WCGT0201..	TS 21	06	0.035		
B3.08	572010508001	WCGT0201..	TS 211	06	0.4		
B3.10	572010510001	TPGX0902..	CS 250 T	08	0.05		
B3.11	572010511001	TPGX0902..	CS 250 T	08	0.055		
B3.12	572010512001	TPGX0902..	CS 250 T	08	0.06		
B3.14	572010514001	TPGX0902..	CS 250 T	08	0.07		
B3.16	572010516001	TPGX0902..	CS 250 T	08	0.07		
B3.18	572010518001	TPGX0902..	CS 250 T	08	0.1		
B3.22	572010522001	TPGX0902..	CS 250 T	08	0.1		

REF.	CODE			TORX T	kg		
B5.06	572010506105	WCGT0201..	TS 21	06	0.075		
B5.08	572010508105	WCGT0201..	TS 211	06	0.09		
B5.10	572010510105	TPGX0902..	CS 250 T	08	0.1		
B5.12	572010512105	TPGX0902..	CS 250 T	08	0.1		
B5.14	572010514105	TPGX0902..	CS 250 T	08	0.2		
B5.16	572010516105	TPGX0902..	CS 250 T	08	0.3		
B8.06	572010506108	WCGT0201..	TS 21	06	0.065		
B8.08	572010508108	WCGT0201..	TS 211	06	0.08		
B8.10	572010510108	TPGX0902..	CS 250 T	08	0.1		
B8.12	572010512108	TPGX0902..	CS 250 T	08	0.2		
B8.14	572010514108	TPGX0902..	CS 250 T	08	0.2		
B8.16	572010516108	TPGX0902..	CS 250 T	08	0.3		

REF.	CODE			TORX T	kg		
SFTP25	470500525001	TPGX0902..	CS 250T	08	0.01		
SFTP32	470500532001	TPGX0902..	CS 250T	08	0.02		
SFTP50	470500550001	TPGX1103..	CS300890T	08	0.08		
SFTP51	470500550003	TCMT16T3..	TS 4	15	0.09		

REF.	CODE			TORX T	kg		
SFCC25	470500525002	CCGT0602..	TS 25	08	0.01		
SFCC32	470500532002	CCGT0602..	TS 25	08	0.02		
SFCC50	470500550002	CCGT09T3..	TS 4	15	0.08		
SFCC51	470500550004	CCMT1204..	TS 5	25	0.09		

- For back-facing machining see p.24

TRM 80/125 Ø 36 ~ 500

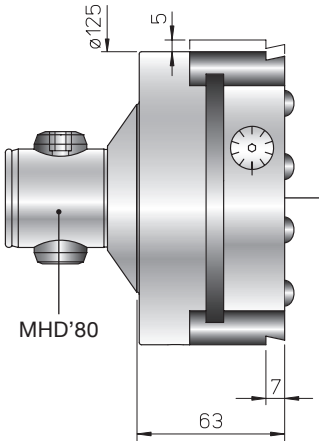

TRM 80/125

Ø 36~500

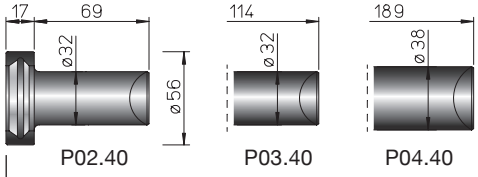

P02.40 P03.40 P04.40

Ø 36~125 Ø 50~138

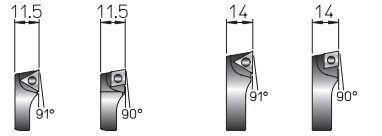

SFTP32 SFCC32 SFTP40 SFCC40

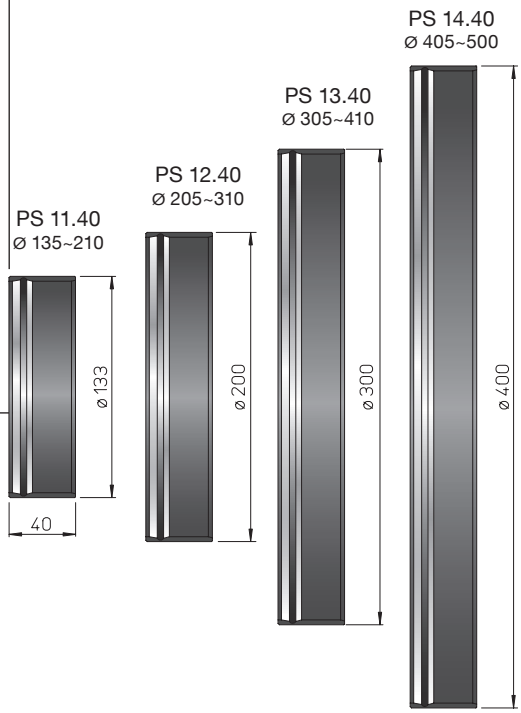

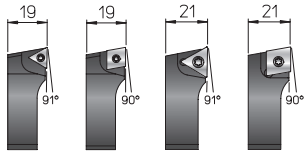

SFTP50 SFCC50 SFTP51 SFCC51

Ø 135~500

2 µm

REF.	CODE	kg		
TRM 80/125	455008001251	5.5		
P02.40	431040320700	0.7		
P03.40	431040321150	1		
P04.40	431040321900	2		

REF.	CODE	kg		
PS 11.40	433040351500	1.5		
PS 12.40	433040352300	2.4		
PS 13.40	433040353300	3.5		
PS 14.40	433040354000	4.6		

KIT K03 Ø 36 ~ 410

TRM 80/125 EXCLUDED

1 PS11.40
1 PS12.40
1 PS13.40
1 P02.40
1 P03.40
1 P04.40
1 SFTP32
1 SFTP40
1 SFTP50

Working Range

Ø 36~138

P02.40 P03.40 P04.40

SFTP32 Ø 36~125 - SFTP40 Ø 50~138

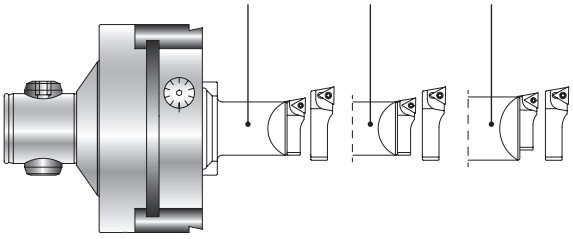

Ø 135~410

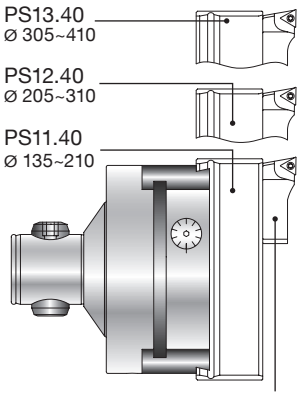

SFTP50

REF.	CODE	kg		
KIT K03 TRM 80/125	655012500030	11.2		

REF.	CODE			TORX T	kg		
SFTP32	470500532001	TPGX 0902..	CS 250T	08	0.02		
SFTP40	470500540001	TPGX 1103..	CS300890T	08	0.04		
SFTP50	470500550001	TPGX 1103..	CS300890T	08	0.08		
SFTP51	470500550003	TCMT 16T3..	TS 4	15	0.09		

REF.	CODE			TORX T	kg		
SFCC32	470500532002	CCGT 0602..	TS 25	08	0.02		
SFCC40	470500540002	CCGT 09T3..	TS 4	15	0.04		
SFCC50	470500550002	CCGT 09T3..	TS 4	15	0.08		
SFCC51	470500550004	CCMT 1204..	TS 5	25	0.09		

TRC 16 ~ 80 ⌀ 18 ~ 132

TRC 16 ⌀ 18 ~ 24

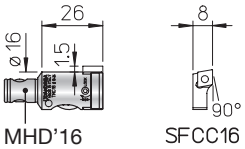

TRC 40 ⌀ 48 ~ 66

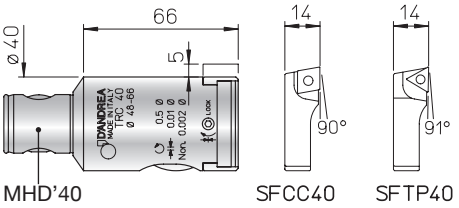

TRC 20 ⌀ 22 ~ 30

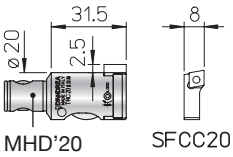

TRC 50 ⌀ 54 ~ 86

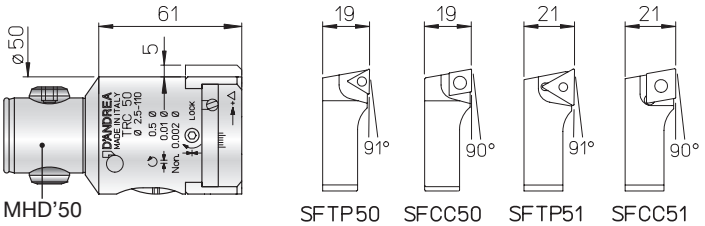

THE TRC50 USES ALL THE TOOLS SUPPLIED WITH TRM50 (p.18-19)

TRC 25 ⌀ 28 ~ 40

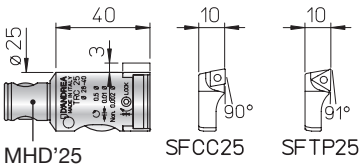

TRC 63 ⌀ 72 ~ 110

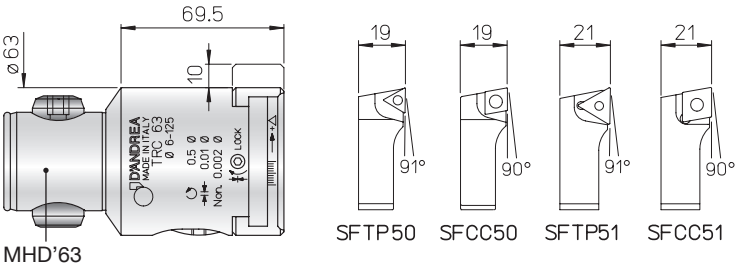

TRC 32 ⌀ 35.5 ~ 53.5

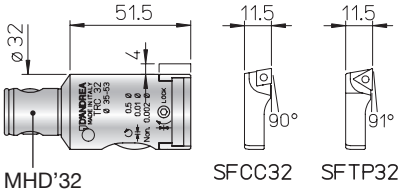

TRC 80 ⌀ 88 ~ 132

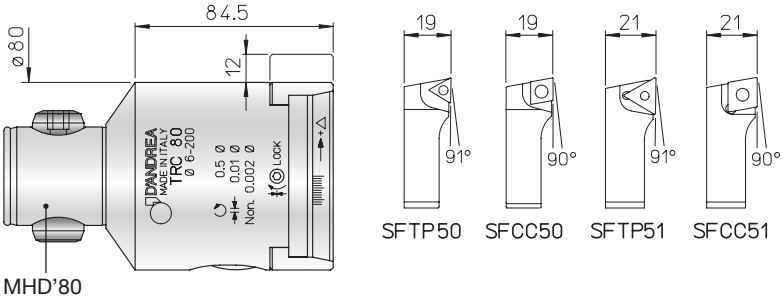

REF.	CODE	kg		
TRC 16	455011600341	0.05		
TRC 20	455012000401	0.1		
TRC 25	455012500501	0.2		
TRC 32	455013200631	0.35		
TRC 40	455014000801	0.7		
TRC 50	455015000801	1		
TRC 63	455016301001	2		
TRC 80	455018001201	3.8		

- For back-facing machining see p.24

REF.	CODE			TORX T	kg		
SFCC16	470500516002	CCGT 0602..	TS 25	08	0.003		
SFCC20	470500520002	CCGT 0602..	TS 25	08	0.005		
SFCC25	470500525002	CCGT 0602..	TS 25	08	0.01		
SFCC32	470500532002	CCGT 0602..	TS 25	08	0.02		
SFCC40	470500540002	CCGT 09T3..	TS 4	15	0.04		
SFCC50	470500550002	CCGT 09T3..	TS 4	15	0.08		
SFCC51	470500550004	CCMT 1204..	TS 5	25	0.09		
SFTP25	470500525001	TPGX 0902..	CS 250T	08	0.01		
SFTP32	470500532001	TPGX 0902..	CS 250T	08	0.02		
SFTP40	470500540001	TPGX 1103..	CS300890T	08	0.04		
SFTP50	470500550001	TPGX 1103..	CS300890T	08	0.08		
SFTP51	470500550003	TCMT 16T3..	TS 4	15	0.09		

MHD' TS / PSC TS

TS 16/16
Ø 20~24

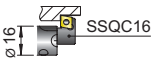

TS 20/20
Ø 23.5~30

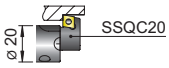

TS 25/25
Ø 29.5~40

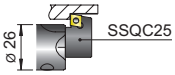

TS 32/32
Ø 39~52

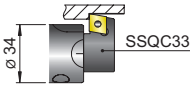

TS 40/40
Ø 51~70

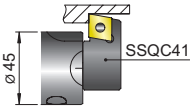

TS 50/50
Ø 69~92

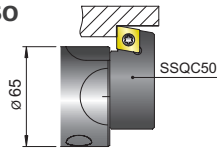

TS 50/63
TS 63/63
Ø 91~122

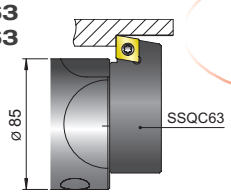

BHT
250 Ø 273~414
500 Ø 523~664
750 Ø 773~914

TS 80/80
SSQC80
Ø 121~162

SSQC90
Ø 161~202

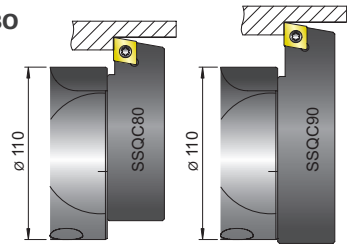

TS 80/90
SSQC90
Ø 161~252

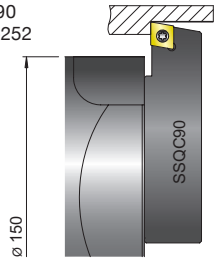

TRM - TRC

TRM 16 Ø 20~25
TRC 16 Ø 20~26

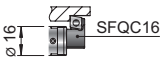

TRM 20 Ø 24.5~32
TRC 20 Ø 24.5~33

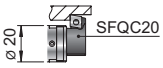

TRM 25 Ø 31.5~40.5
TRC 25 Ø 31.5~42.5

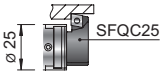

TRM 32 Ø 38.5~51.5
TRC 32 Ø 38.5~53.5

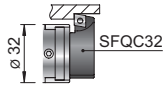

TRM 40 Ø 50.5~65
TRC 40 Ø 50.5~67

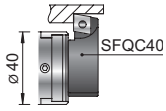

TRM 50 Ø 56~142
TRE 50 Ø 56~144
TRC 50 Ø 56~144

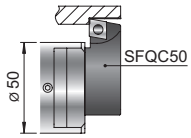

CALCULATION FORMULA FOR MINIMUM ENTERING Ø

B ø min = (ø C + ø A + 1) : 2

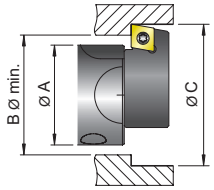

CARTRIDGE DIMENSIONS

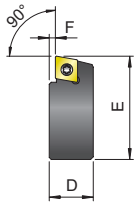

TRM

BHT
250 Ø 253~505
500 Ø 503~755
750 Ø 753~1005

TRM 50/63
TRM 63/63
PS 11.30
Ø 82~102

PS 12.30
Ø 100~157

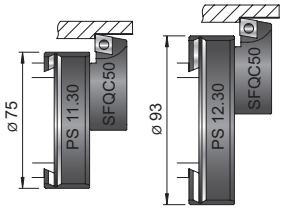

TRM 50/80
TRM 80/80
PS 12.30
Ø 100~142

PS 13.30
Ø 142~222

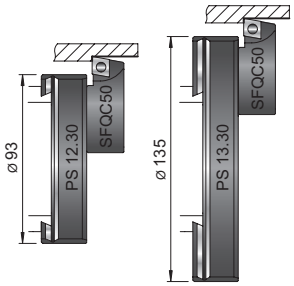

TRM 80/125
PS 11.40
Ø 140~212

PS 12.40
Ø 210~312

PS 13.40
Ø 310~412

PS 14.40
Ø 410~502

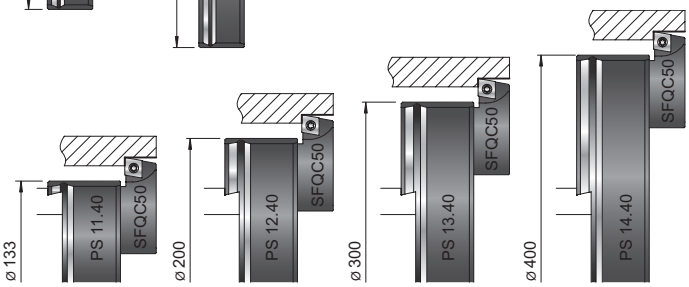

TRC

TRC 63
Ø 72.5~115

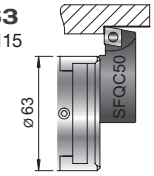

TRC 80
Ø 88.5~135.5

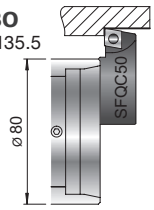

REF.	CODE	D	E	F	CCMT	TS	TORX T
SSQC 16	470500516261	10	16	2	0602..	25	08
SSQC 20	470500520261	11	19.5	1.5	0602..	25	08
SSQC 25	470500525261	14.5	24	2.5	0602..	25	08
SSQC 33	470500533261	17	32	3	09T3..	4	15
SSQC 41	470500541261	21	42	3.5	1204..	5	25
SSQC 50	470500550261	24.5	57	3.5	1204..	5	25
SSQC 63	470500563261	28.5	76	3.5	1204..	5	25
SSQC 80	470500580261	31.5	101	3.5	1204..	5	25
SSQC 90	470500590261	31.5	122	3.5	1204..	5	25

REF.	CODE	D	E	F	CCMT	TS	TORX T
SFQC 16	470500516062	10	18	2	0602..	25	08
SFQC 20	470500520062	10.5	22.5	2	0602..	25	08
SFQC 25	470500525062	12	28.5	2.5	0602..	25	08
SFQC 32	470500532062	13.5	35.5	2.5	0602..	25	08
SFQC 40	470500540062	16.5	46	3	09T3..	4	15
SFQC 50	470500550062	20.5	53	3	09T3..	4	15

PE COLLETS CHUCKING TOOLS

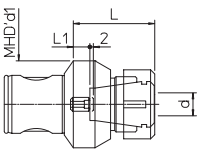

Supplied without collets and clamping wrenches

REF.	CODE	MHD’ d1	d	L	L1	kg			N·m
PE 20 / ER16M	655702000160	20	0.5-10	32	1	0.06	ER-16M	E16M	40
PE 32 / ER25M	655703200250	32	1-16	42	1.5	0.25	ER-25M	E25M	160
PE 40 / ER25	655704000250	40	1-16	45	5	0.4	UM/ER25	E25	200
PE 50 / ER25	655705000250	50	1-16	48	7	0.7	UM/ER25	E25	200
PE 50 / ER32	655705000320	50	2-20	55	8	1	UM/ER32	E32	220
PE 63 / ER32	655706300320	63	2-20	59	12	1.3	UM/ER32	E32	220

FORCE MILLING POWER CHUCK

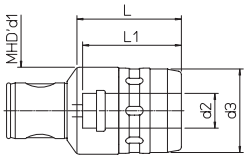

Supplied without collets and clamping wrenches

REF.	CODE	MHD’ d1	d2	d3	L	L1	kg
FORCE 50/20	656305000200	50	20	48	60	60	1
FORCE 63/32	656306300320	63	32	66	80	80	2

AW WELDON WHISTLE NOTCH CHUCKING TOOLS

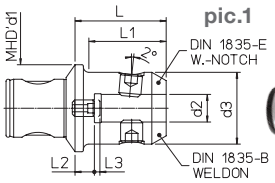

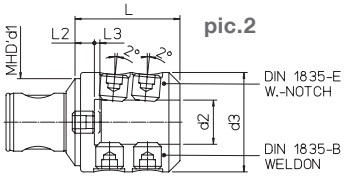

REF.	CODE	MHD’ d1	$d2^{H5}$	d3	L	L1	L2	L3	kg	pic.
AW 50/6	655805000060	50	6	25	44	32.5	7	2	0.5	1
AW 50/8	655805000080	50	8	28	44	33	7	2	0.5	1
AW 50/10	655805000100	50	10	35	52	42	11	3	0.7	1
AW 50/12	655805000120	50	12	42	57	48	11	3	0.8	1
AW 50/14	655805000140	50	14	42	57	48	11	3	0.8	1
AW 50/16	655805000160	50	16	48	67	61	17	4	1.1	1
AW 50/20	655805000200	50	20	51	67		16	4	1.2	1
AW 50/25	655805000250	50	25	63	80		22	4	1.8	2
AW 63/16	655806300160	63	16	48	64	53	14	4	1.4	1
AW 63/20	655806300200	63	20	52	66	56	14	4	1.5	1
AW 63/25	655806300250	63	25	64	74		16	4	2.1	2
AW 63/32	655806300320	63	32	72	76		14	4	2.5	2
AW 80/40	655808000400	80	40	80	83		12	4	3.2	2

PF DISC AND FACING CUTTER HOLDERS

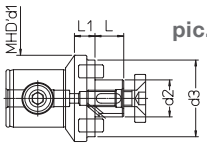

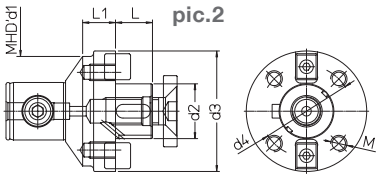

REF.	CODE	MHD’ d1	d2	d3	d4	M	L	L1	kg	pic.
PF 40/16	655904020165	40	16	32			17	15	0.3	1
PF 40/22	655904020225	40	22	40			19	13	0.4	1
PF 50/16	655905000160	50	16	32			17	15	0.5	1
PF 50/22	655905000220	50	22	40			19	15	0.5	1
PF 50/27	655905000270	50	27	50			21	15	0.6	1
PF 50/32	655905000320	50	32	60			24	15	0.7	1
PF 63/22	655906300220	63	22	60			19	15	0.9	1
PF 63/27	655906300270	63	27	60			21	15	1.1	1
PF 63/32	655906300320	63	32	63			24	15	1.2	1
PF 80/32	655908000320	80	32	80			24	24	1.7	1
PF 80/40	655908000400	80	40	84	66.7	M12	27	24	1.9	2
PF 80/50	655908000500	80	50	90			30	24	2.0	2
PF 80/60	655908000600	80	60	128.5	101.6	M16	40	31.5	3.5	2

MHD’ 80 - HT 8 CHUCKING TOOLS MHD’ 80 - HT 8

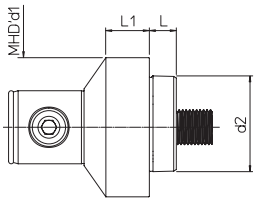

REF.	CODE	MHD’ d1	d2	L	L1	kg
MHD’80-HT8	655108000080	80	HT8	15.5	25	2

NS SEMIFINISHED CHUCK HOLDERS

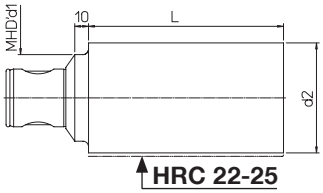

ON REQUEST

REF.	CODE	MHD’ d1	d2	L	kg
NS 50	657205001600	50	63	160	4.2
NS 63	657206302000	63	80	200	8.7
NS 80	657208002500	80	100	250	16

Offering of high-precision monolithic and modular tool holders to perform various different operations on machine-tools.
The strong point of the **PSC** system is the ISO 26623 polygonal-conical connection which guarantees extreme rigidity even in the most demanding process.
The system allows the use of the entire **MHD'** line.

PSC COUPLING ISO 26623-1/2

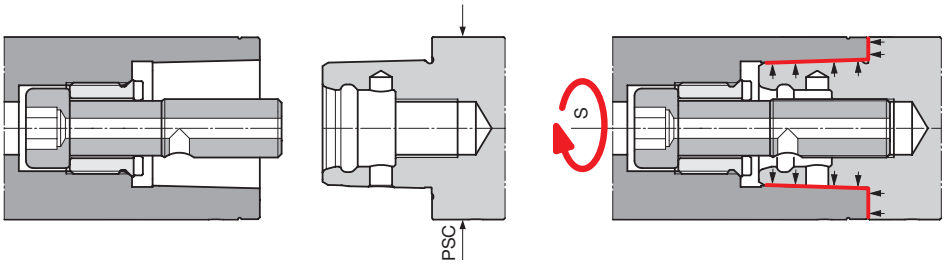

PSC	S ⬡	N·m
40	8	55
50	10	95
63-80	14	170

The **PSC coupling**, compliant with the ISO 26623 standard, is available in four sizes.
The system is complete with arbors, extensions, reductions, adapters, roughing and finishing heads.
The range includes ER collet chucks and MONOFORCE power chucks.

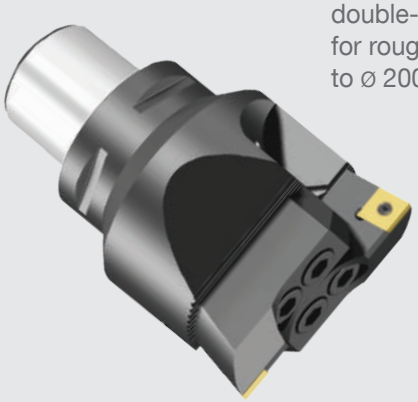

PSC - TS complete line of double-bit boring heads for roughing from ø 68 mm to ø 200 mm.

PSC - TRM complete line of micrometric heads for finishing from ø 2.5 mm to ø 220 mm.

ARBORS, manufactured in 4 different sizes **PSC 40-50-63 and 80**, are made of case-hardened, tempered and subsequently ground steel.

PSC - PR e RD for each size of PSC, extensions and reductions are available in different lengths which allow to achieve the required working depths.

MONOforce line of high precision power milling chucks ideal for machining where precision and high clamping forces for the cutting tool are required.

PSC - ER collet holders made for the use of ER standard collets.

PF adapters for side and face milling cutters.

PSC - MHD' adapters to integrate the entire MHD' system boring line into the PSC program.

PSC

PSC - PR Extensions

PSC - RD Reductions

ARBORS PSC

DIN - PSC | MAS BT - PSC | HSK - PSC | CAT - PSC

PSC - TS Roughing Heads | **PSC - TRM** Testarossa **2µm**

PSC50 - PR50

PSC50 - RD50

PSC 50

PSC50 - TS50 ø 68 ~ 90 — PSC50 - TRM50 ø 2.5 ~ 140

PSC63 - PR63

PSC63 - RD63

PSC 63

PSC63 - TS50 ø 68 ~ 90 — PSC63 - TS63 ø 90 ~ 120 — PSC80 - TS80 ø 120 ~ 200 — PSC63 - TRM50 ø 2.5 ~ 140 — PSC63 - TRM63 ø 2.5 ~ 155 — PSC63 - TRM80 ø 2.5 ~ 220

PSC80 - PR80

CHUCKING TOOLS

PSC - ER Collet chucks | PSC - MF Power Chucks | PSC - PF Portafrese | PSC - NS Blanks

modulhard'andrea

MHD'	PR Extensions	RD Reductions			RAV Vibration-damping reductions	TS Roughing Heads	TRM 2µm Testarossa	TRC 10µm Testarossa
16	PR 16 (25)	RD 32/16	RD 40/16	RD 50/16	RAV 50/16	TS 16/16 ø 18 ~ 22	TRM 16 ø 18 ~ 23	TRC 16 ø 18 ~ 24
20	PR 20 (32)	RD 32/20	RD 40/20	RD 50/20	RAV 50/20	TS 20/20 ø 22 ~ 28	TRM 20 ø 22 ~ 29	TRC 20 ø 22 ~ 30
25	PR 25 (25-40)	RD 32/25	RD 40/25	RD 50/25	RAV 50/25	TS 25/25 ø 28 ~ 38	TRM 25 ø 28 ~ 38	TRC 25 ø 28 ~ 40
32	PR 32 (32-50)		RD 40/32	RD 50/32	RAV 50/32	TS 32/32 ø 35.5 ~ 50	TRM 32 ø 35.5 ~ 51.5	TRC 32 ø 35.5 ~ 53.5
40	PR 40 (40-63)			RD 50/40	RAV 50/40	TS 40/40 ø 50 ~ 68	TRM 40 ø 48 ~ 63	TRC 40 ø 48 ~ 66
50	PR 50 (50-80-100)		RD 63/50	RD 80/50	RAV 63/50	TS 50/50 - 50/63 ø 68~90 ø 90~120	TRM 50 ø 2.5 ~ 140; TRE 50 ø 2.5 ~ 142; TRM 50/63 ø 2.5 ~ 155; TRM 50/80 ø 2.5 ~ 220	TRC 50 ø 2.5 ~ 140
63	PR 63 (63-100-125)			RD 80/63	RAV 80/63	TS 63/63 ø 90 ~ 120	TRM 63/63 ø 2.5 ~ 155	TRC 63 ø 72 ~ 110
80	PR 80 (80-125-160)					TS 80/80 ø 120 ~ 200	TRM 80/80 ø 2.5 ~ 220	TRC 80 ø 88 ~ 132
						TS 80/90 ø 160 ~ 250	TRM 80/125 ø 36 ~ 500	

ARBORS PSC-MHD'

PSC50 - MHD'

PSC63 - MHD'

PSC80 - MHD'

CHUCKING TOOLS

Power Chucks | Collet chucks | Weldon | Shell mill holders | Blanks

DIN-AD - PSC DIN 69871 / ISO 26623-2

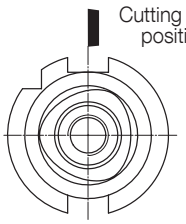

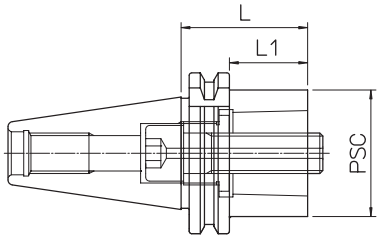

DIN	REF.	CODE	PSC	L	L1	kg
40	DIN69871-AD40 PSC 50.40	41PS05014028	50	40	21	0.9
50	DIN69871-AD50 PSC 50.30	41PS05015020	50	30	11	2.7
50	DIN69871-AD50 PSC 63.30	41PS06315028	63	30	11	2.8
50	DIN69871-AD50 PSC 80.70	41PS08015020	80	70	51	3.7

MAS BT-AD - PSC MAS 403 BT / ISO 26623-2

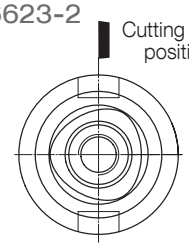

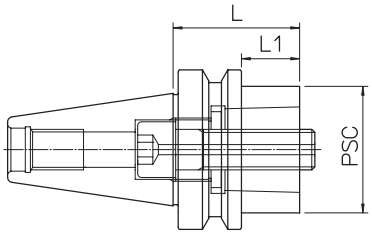

BT	REF.	CODE	PSC	L	L1	kg
40	MAS403 BT40-AD PSC 50.50	41PS05014032	50	50	23	1.2
50	MAS403 BT50-AD PSC 50.40	41PS05015030	50	40	2	3.4
50	MAS403 BT50-AD PSC 63.50	41PS06315032	63	50	12	3.5
50	MAS403 BT50-AD PSC 80.70	41PS08015030	80	70	32	4

HSK-T - PSC DIN 69893 / ISO 26623-2

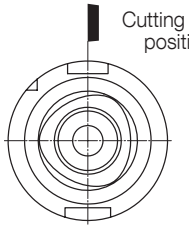

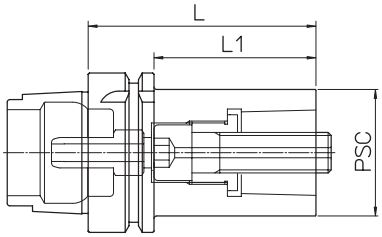

Supplied with coolant tube

HSK-T	REF.	CODE	PSC	L	L1	kg
63	HSK-T63 PSC 40.80	41PS0405632T	40	80	54	1.1
63	HSK-T63 PSC 50.90	41PS0505632T	50	90	64	1.5
100	HSK-T100 PSC 50.100	41PS0505992T	50	100	71	3
100	HSK-T100 PSC 63.110	41PS0635992T	63	110	81	3.6
100	HSK-T100 PSC 80.120	41PS0805992T	80	120	91	4.7

CAT-AD - PSC ANSI B5.50 / ISO 26623-2

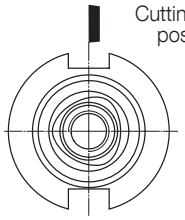

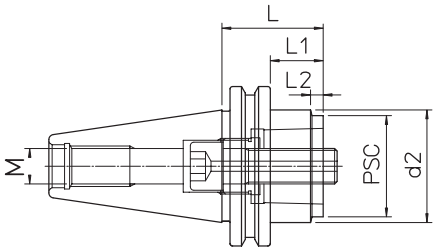

CAT	REF.	CODE	PSC	d2	L	L1	L2	M	kg
40	CAT40 AD PSC 50.50	41PS05014045	50		50	31		UNC 5/8-11	1
50	CAT50 AD PSC 50.40	41PS05015045	50	69.9	40	21	5	UNC 1-8	2.5
50	CAT50 AD PSC 63.50	41PS06315045	63	70	50	31	12.5	UNC 1-8	3
50	CAT50 AD PSC 80.100	41PS08015045	80		100	81		UNC 1-8	4.6

PSC - PR ISO 26623-1 / 2

EXTENSIONS

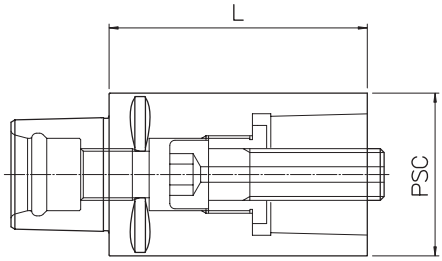

PSC	REF.	CODE	L	kg		
40	**PR PSC 40.60**	656PS04006000	60	0.55		
50	**PR PSC 50.80**	656PS05008000	80	1.1		
63	**PR PSC 63.100**	656PS06310000	100	2.2		
80	**PR PSC 80.100**	656PS08010000	100	3.6		

PSC - RD ISO 26623-1 / 2

REDUCTIONS

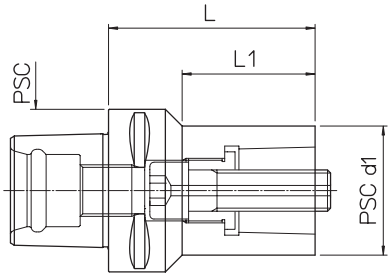

PSC	REF.	CODE	PSCd1	L	L1	kg		
50	**RD PSC 50/40.65**	657PS05004000	40	65	45	0.7		
63	**RD PSC 63/40.80**	657PS06304000	40	80	51.4	1.3		
63	**RD PSC 63/50.80**	657PS06305000	50	80	51.5	1.5		
80	**RD PSC 80/50.80**	657PS08005000	50	80	49.3	2.2		
80	**RD PSC 80/63.80**	657PS08006300	63	80	53.1	2.5		

PSC - MHD' ISO 26623-1

REDUCTIONS TO MODULAR

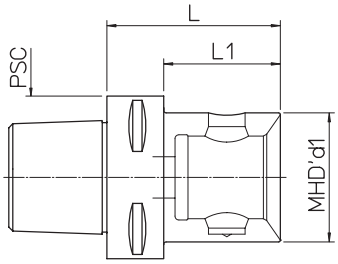

PSC	REF.	CODE	MHD' d1	L	L1	kg		
50	**PSC 50 - MHD' 50.55**	416502605005	50	55		0.8		
63	**PSC 63 - MHD' 40.50**	416402606305	40	50	28	0.9		
63	**PSC 63 - MHD' 50.55**	416502606305	50	55	33	0.8		
63	**PSC 63 - MHD' 63.77**	416632606307	63	77		1.8		
80	**PSC 80 - MHD' 50.60**	416502608006	50	60	30	2		
80	**PSC 80 - MHD' 63.70**	416632608007	63	70	40	2.3		
80	**PSC 80 - MHD' 80.75**	416802608007	80	75		2.6		

On request supplied with coolant tube **PSC**. See p.57

PSC - TS Ø 68 ~ 200

Simple and extremely rigid roughing heads, thanks to the serrated surfaces between the head body and the bit holders. The constant distance between the bit holder clamping screw and the cutting edge guarantees the stability of the system.

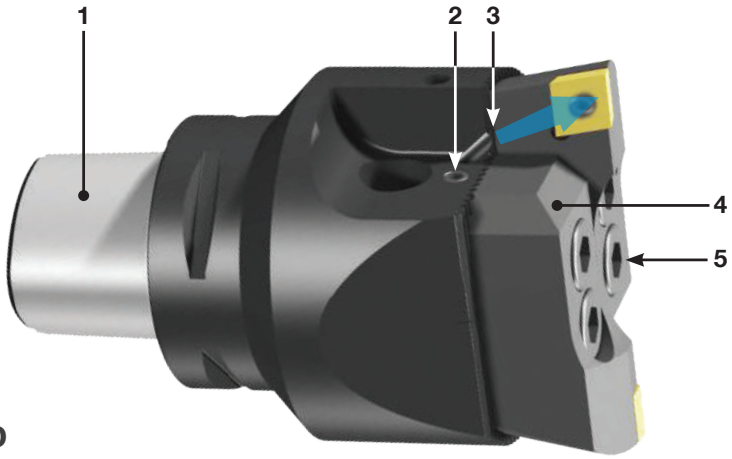

1. **PSC 50 - 63 - 80**
2. Setting screws
3. Coolant outlets **Max BAR 40**
4. Bit holders
5. Tools clamp screws

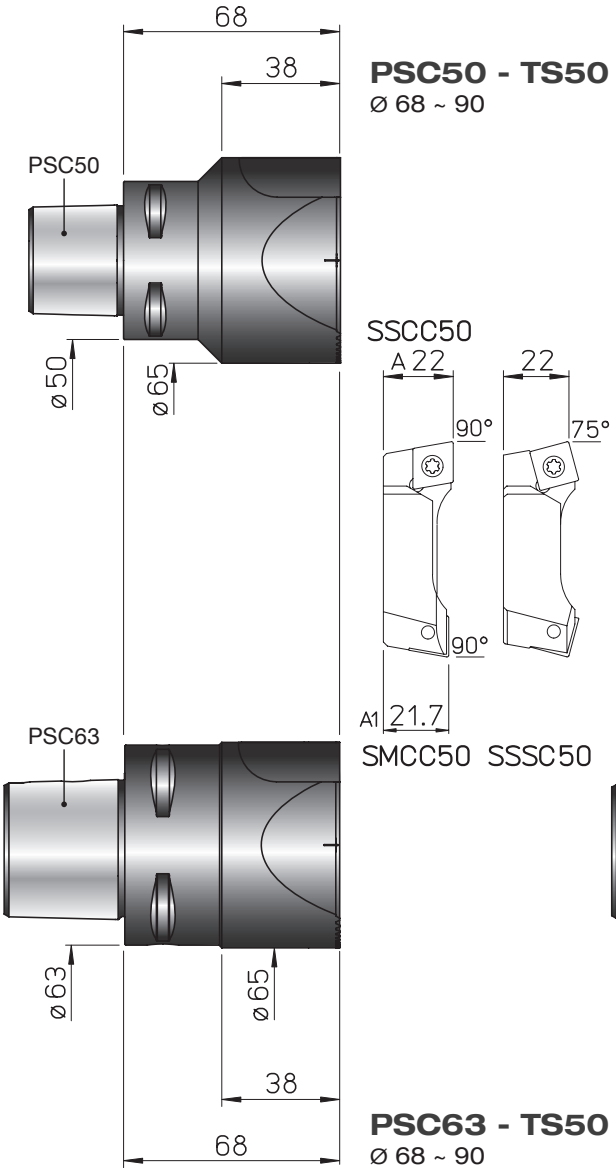

PSC50 - TS50
Ø 68 ~ 90

PSC63 - TS50
Ø 68 ~ 90

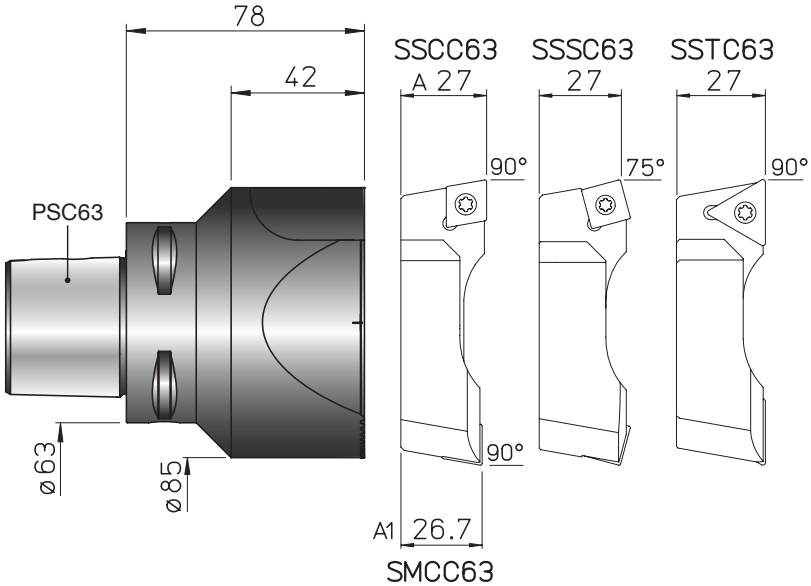

PSC63 - TS63
Ø 90 ~ 120

REF.	CODE	kg		
PSC50 - TS50	71PSC050TS50090	1.4		
PSC63 - TS50	71PSC063TS50090	1.8		

REF.	CODE	kg		
PSC63 - TS63	71PSC063TS63105	2.7		
PSC63 - TS80	71PSC063TS80115	3.8		

On request supplied with coolant tube **PSC**. See p.57

USE TS for ROUGHING and SEMI-FINISHING operations.

Cutting edges can be adjusted on a pre-setter and these TS heads can be used in three different configurations, a balanced setup, with a single cutting edge **(pic.3)** or staggered inserts **(pic.2)** half the feed.

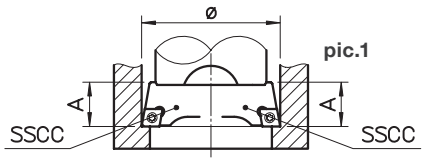

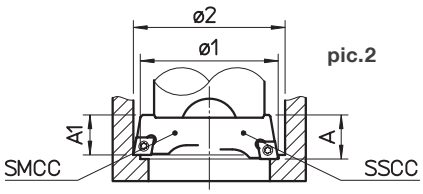

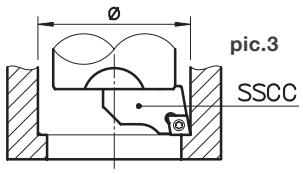

pic.1 with two SSCC bit holders aligned and on the same diameter for roughing operations with high feedrate.

pic. 2 with one SSCC bit holder and one SMCC bit holder staggered and on a different diameter for roughing operations with high depth of cut.

pic.3 with a single bit holder for roughing or semi-finishing operations.

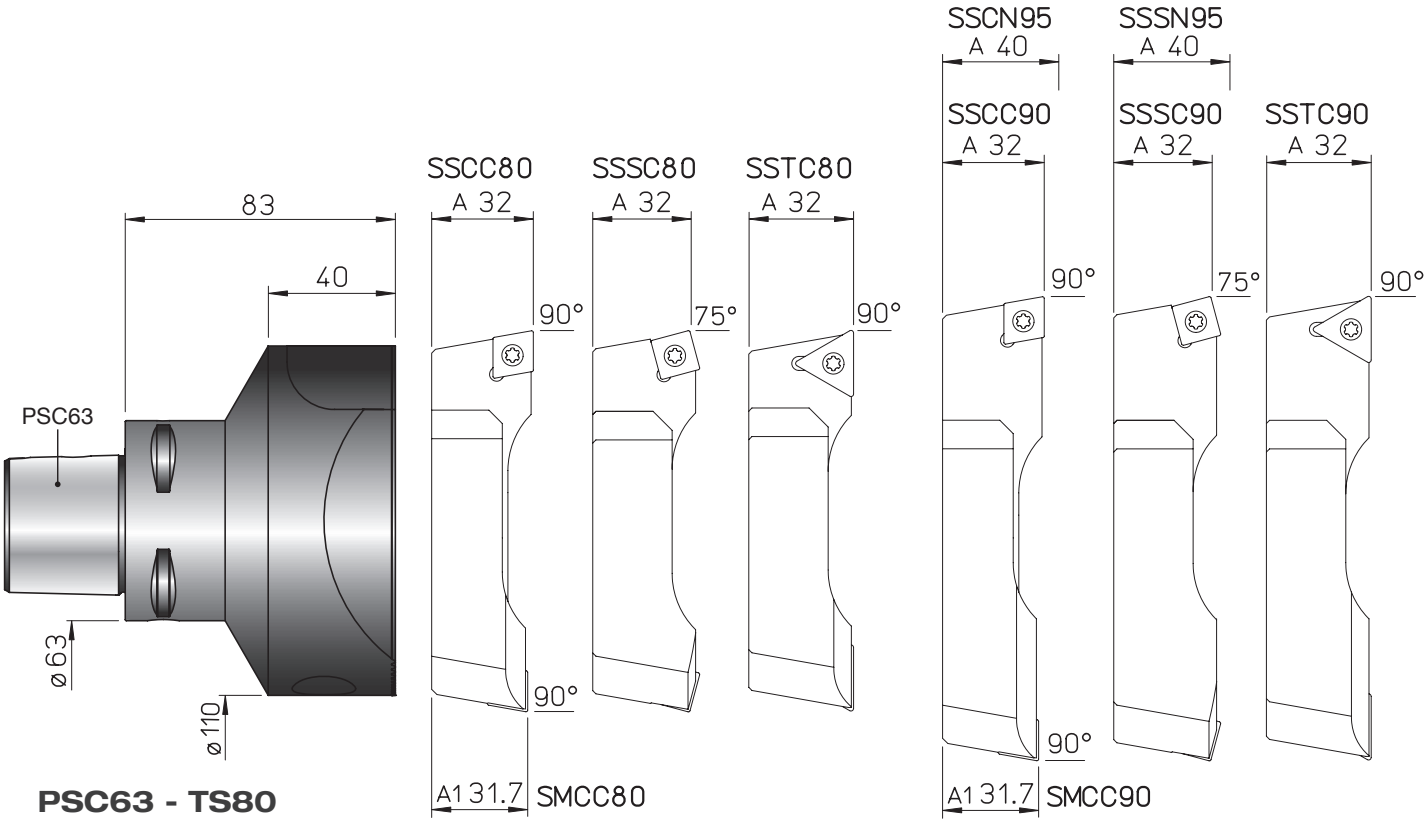

PSC63 - TS80

ø 120 ~ 200

ø **120~160**

ø **160~200**

REF.	CODE		TS	TORX T	kg
SSCC 50	470500550204	CCMT 1204..	5	25	0.1
SSCC 63	470500563201	CCMT 1204..	5	25	0.2
SSCC 80	470500580201	CCMT 1204..	5	25	0.5
SSCC 90	470500590201	CCMT 1204..	5	25	0.7
SSCN 95	470500595201	CNM. 1906..			0.9
SSTC 63	470500563206	TCMT 2204..	5	25	0.2
SSTC 80	470500580206	TCMT 2204..	5	25	0.5
SSTC 90	470500590206	TCMT 2204..	5	25	0.7

REF.	CODE		TS	TORX T	kg
SMCC 50	470500550205	CCMT 1204..	5	25	0.1
SMCC 63	470500563203	CCMT 1204..	5	25	0.2
SMCC 80	470500580203	CCMT 1204..	5	25	0.5
SMCC 90	470500590203	CCMT 1204..	25	08	0.7
SSSC 50	470500550202	SCMT 1204..	5	25	0.1
SSSC 63	470500563202	SCMT 1204..	5	25	0.2
SSSC 80	470500580202	SCMT 1204..	5	25	0.5
SSSC 90	470500590202	SCMT 1204..	5	25	0.7
SSSN 95	470500595202	SNM. 1906..	**p.57**		0.9

- For back-facing machining see p.24

PSC - ER

PSC - FORCE

PSC - PF

PSC - NS

PSC - ER

COLLETS CHUCKING TOOLS

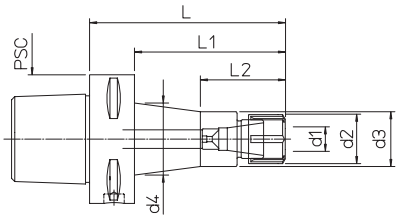

Supplied without collets and clamping wrenches - Chip prearrangement

PSC	REF.	CODE	ER	d1	d2	d3	d4	L	L1	L2	kg
50	**PSC50 - ER16.55**	71PSC-050ER1605	16M	0.5-10	22	24		55	35	26	0.5
50	**PSC50 - ER25.65**	71PSC-050ER2506	25	1-16	42			65	45		0.8
63	**PSC63 - ER16.60**	71PSC-063ER1606	16M	0.5-10	22	24		60	38		0.85
63	**PSC63 - ER16.120**	71PSC-063ER1612	16M	0.5-10	22	24	31	120	98	33	1.1
63	**PSC63 - ER25.65**	71PSC-063ER2506	25	1-16	42			65	43	37	1.1
63	**PSC63 - ER25.140**	71PSC-063ER2514	25	1-16	42		47.5	140	118	43.5	1.9
63	**PSC63 - ER32.75**	71PSC-063ER3207	32	2-20	50			75	53		1.5
63	**PSC63 - ER32.160**	71PSC-063ER3216	32	2-20	50			160	138		2.5
80	**PSC80 - ER25.70**	71PSC-080ER2507	25	1-16	42			70	40		2.1
80	**PSC80 - ER32.75**	71PSC-080ER3207	32	2-20	50			72	45		2..5

PSC - FORCE

MILLING POWER CHUCKS

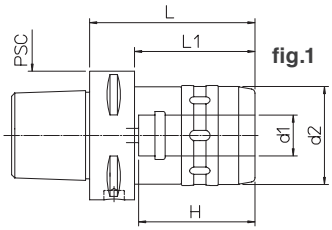

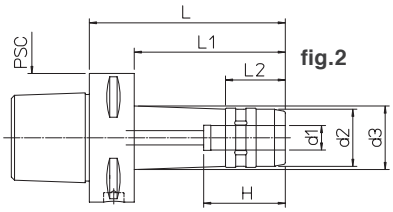

Without clamping wrench - Chip prearrangement

PSC	REF.	CODE	d1	d2	d3	H	L	L1	L2	kg	fig.
63	**PSC 63 - MF 12.100**	71PSC-063MF1210	12	28	31.5	46	100	78	29.5	1.4	**2**
63	**PSC 63 - MF 20.80**	71PSC-063MF2008	20	48		60	80	58		1.3	**1**
63	**PSC 63 - MF 32.100**	71PSC-063MF3210	32	66		80	100			2.1	**1**
80	**PSC 80 - MF 20.80**	71PSC-080MF2008	20	48		60	80	50		3.7	**1**
80	**PSC 80 - MF 32.100**	71PSC-080MF3210	32	66		80	100	70		4.4	**1**

PSC - KIT K01

MONOforce 20-32

1 RC 20.06 1 RC 20.12
1 RC 20.08 1 RC 20.16
1 RC 20.10 1 CHV 50

1 RC 32.06 1 RC 32.16
1 RC 32.08 1 RC 32.20
1 RC 32.10 1 RC 32.25
1 RC 32.12 1 CHV 75

MF 20

MF 32

PSC	REF.	CODE	kg
63	**KIT K01 MONOFORCE 20.80 PSC63**	7KPSC-063MF2008	2.3
63	**KIT K01 MONOFORCE 32.100 PSC63**	7KPSC-063MF3210	4.6
80	**KIT K01 MONOFORCE 20.80 PSC80**	7KPSC-080MF2008	5.4
80	**KIT K01 MONOFORCE 32.100 PSC80**	7KPSC-080MF3210	7.5

PSC - PF

SHELL MILL HOLDERS

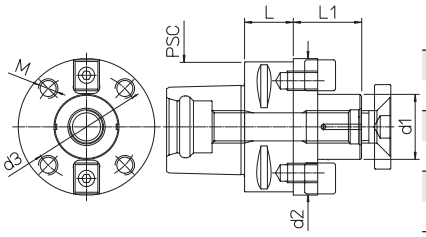

PSC	REF.	CODE	d1	d2	d3	M	L	L1	kg
50	**PSC 50 - PF22.25**	71PSC-050PF2202	22				25	19	0.5
50	**PSC 50 - PF27.25**	71PSC-050PF2702	27				25	21	0.6
63	**PSC 63 - PF27.25**	71PSC-063PF2702	27				25	21	0.8
63	**PSC 63 - PF32.25**	71PSC-063PF3202	32				25	24	0.9
80	**PSC 80 - PF32.30**	71PSC-080PF3203	32				30	24	1.8
80	**PSC 80 - PF40.45**	71PSC-080PF4004	40	84	66.7	M12	45	27	2.4

PSC - NS

SEMIFINISHED CHUCK HOLDERS

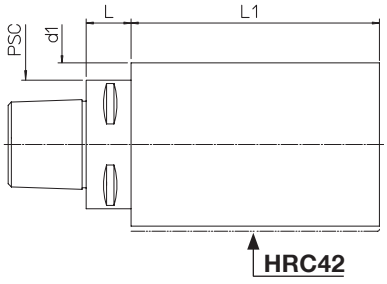

PSC	REF.	CODE	d1	L	L1	kg
50	**PSC 50 - NS 63.160/140**	71PSC050Z406314	63	20	140	3.8
50	**PSC 50 - NS 80.160/140**	71PSC050Z408014	80	20	140	10.2
50	**PSC 50 - NS 100.180/160**	71PSC050Z410016	100	22	160	5.9
63	**PSC 63 - NS 80.162/140**	71PSC063Z408014	80	22	140	6.2
63	**PSC 63 - NS 100.182/160**	71PSC063Z410016	100	22	160	10.4
63	**PSC 63 - NS 120.202/180**	71PSC063Z412018	120	22	180	17
80	**PSC 80 - NS 100.190/160**	71PSC080Z410016	100	30	160	11.5

On request supplied with coolant tube **PSC**. See p.57

PSC - TRM Ø 2.5 ~ 220

PSC50 - TRM 50	RPM 8.000
PSC63 - TRM 50	RPM 8.000
PSC63 - TRM 63	RPM 6.000
PSC63 - TRM 80	RPM 5.000

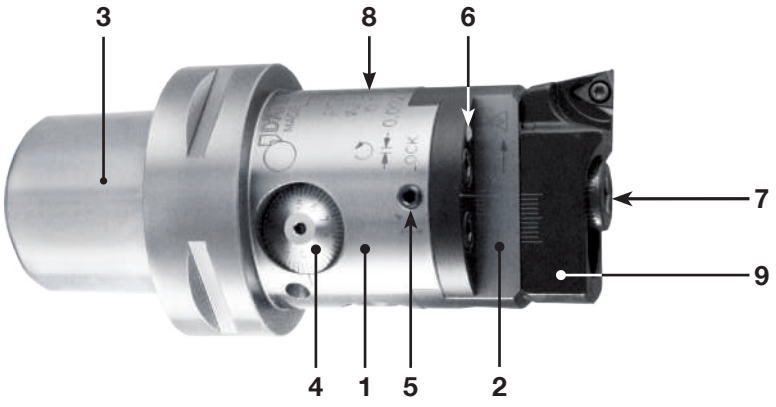

TRM heads allow high precision machining and excellent surface finish in the **IT6** tolerance class. The adjustment sensitivity of **1 micron** on the radius is easily readable on the vernier scale and can also be performed in the machine spindle.

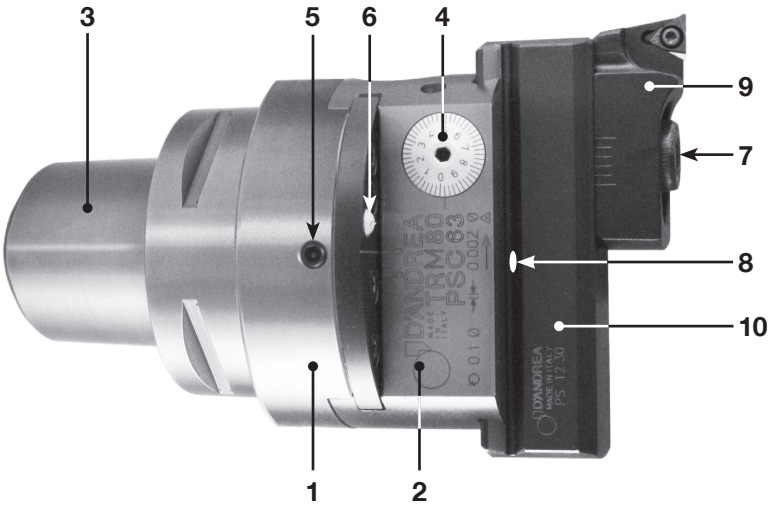

2 µm

1. Body
2. Slide toolholder
3. **PSC 50-63-80**
4. Micrometric vernier scale
5. Slide clamp screw
6. Coolant outlet
Max BAR 40
7. Tools clamp screws
8. Oiler
9. Bit holder
10. Tool holder

PSC50 - TRM50
Ø 2.5 ~ 140

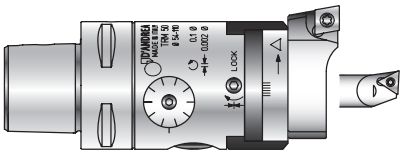

PSC63 - TRM50
Ø 2.5 ~ 140

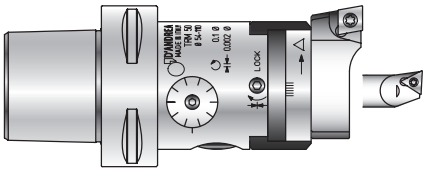

PSC63 - TRM63
Ø 2.5 ~ 155

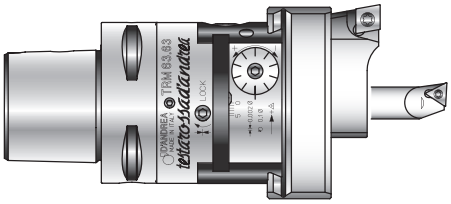

PSC63 - TRM80
Ø 2.5 ~ 220

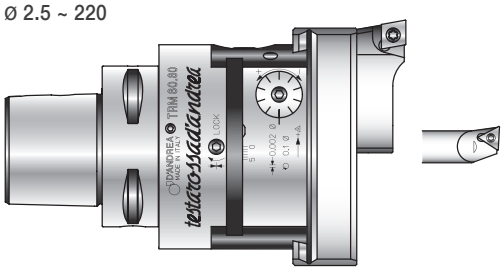

PSC50 - TRM50
Ø 2.5 ~ 140

PSC63 - TRM50
Ø 2.5 ~ 140

2 µm

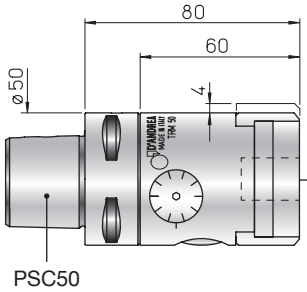

PSC50-TRM50

Ø 2.5~140

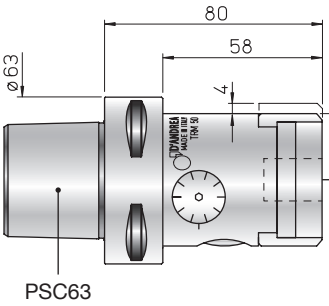

PSC63-TRM50

Ø 2.5~140

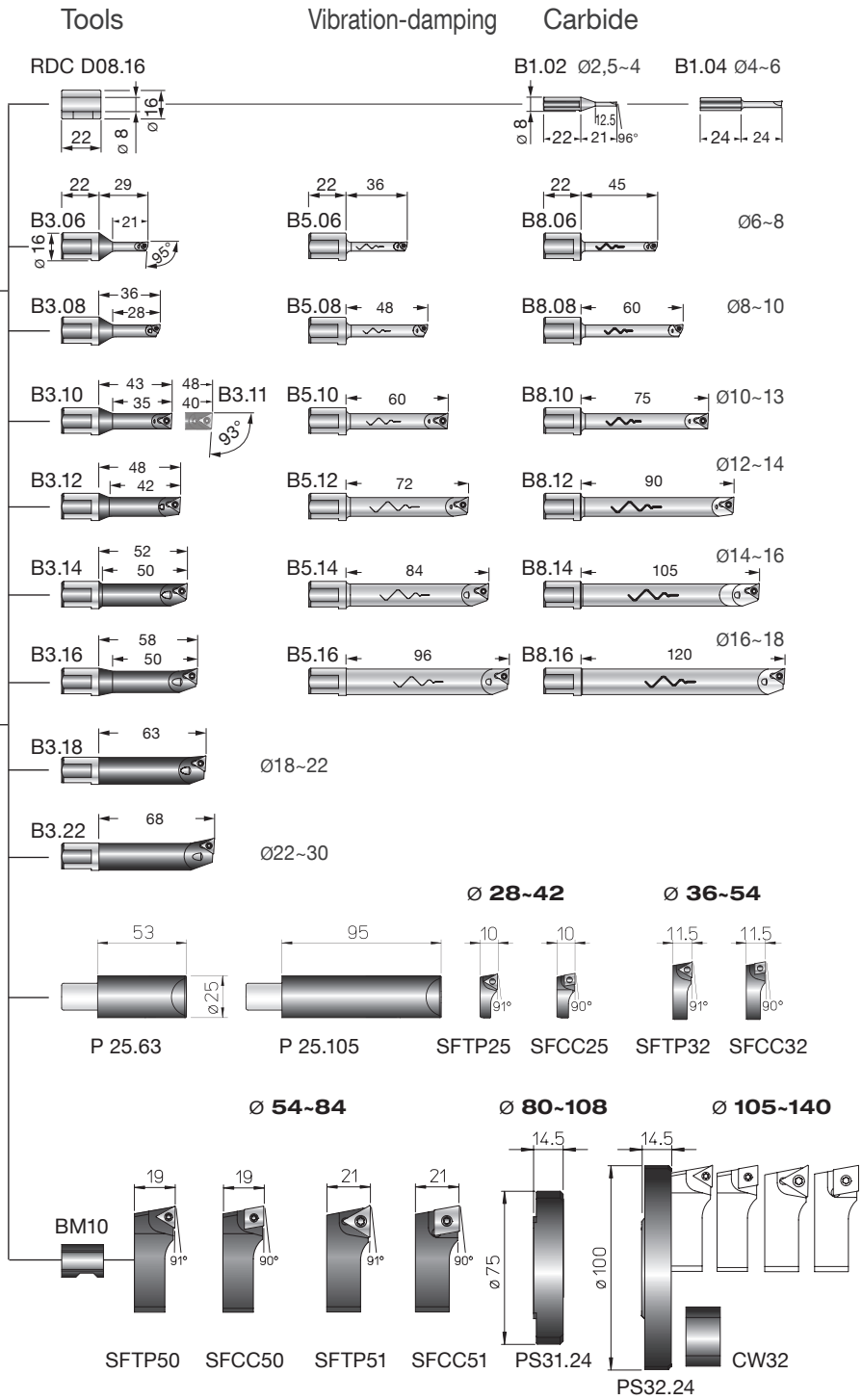

REF.	CODE	kg
PSC50-TRM50	71PSC050TR50080	0.9
PSC63-TRM50	71PSC063TR50080	1.1
D08.16	200560116082	0.02
P25.63	435116250631	0.5
P25.105	435116251051	0.8
PS 31.24	433024140751	0.19
PS 32.24	433024141001	0.2
CW 32	392011003201	0.07

On request supplied with coolant tube **PSC**. See p.57

KIT K01 PSC50 - TRM50
Ø 6 ~ 140

1 PSC50-TRM50 1 SFTP 25
1 B3.06 1 SFTP 32
1 B3.08 1 SFTP 50
1 B3.11 1 P 25.63
1 B3.16 1 PS 31.24
1 B3.22 1 PS 32.24
1 CW 32

5 TPGX 090202L DC100
1 TPGX 110302L DC100
2 WCGT 020102L DC10

REF.	CODE	kg		
KIT K01 PSC50-TRM50	7KPSC050TR50081	3.5		

KIT K01 PSC63 - TRM50
Ø 6 ~ 140

1 PSC63-TRM50 1 SFTP 25
1 B3.06 1 SFTP 32
1 B3.08 1 SFTP 50
1 B3.11 1 P 25.63
1 B3.16 1 PS 31.24
1 B3.22 1 PS 32.24
1 CW 32

5 TPGX 090202L DC100
1 TPGX 110302L DC100
2 WCGT 020102L DC10

REF.	CODE	kg		
KIT K01 PSC63-TRM50	7KPSC063TR50081	4.2		

KIT K01 PSC50-TRM50 / PSC63-TRM50

Working Range

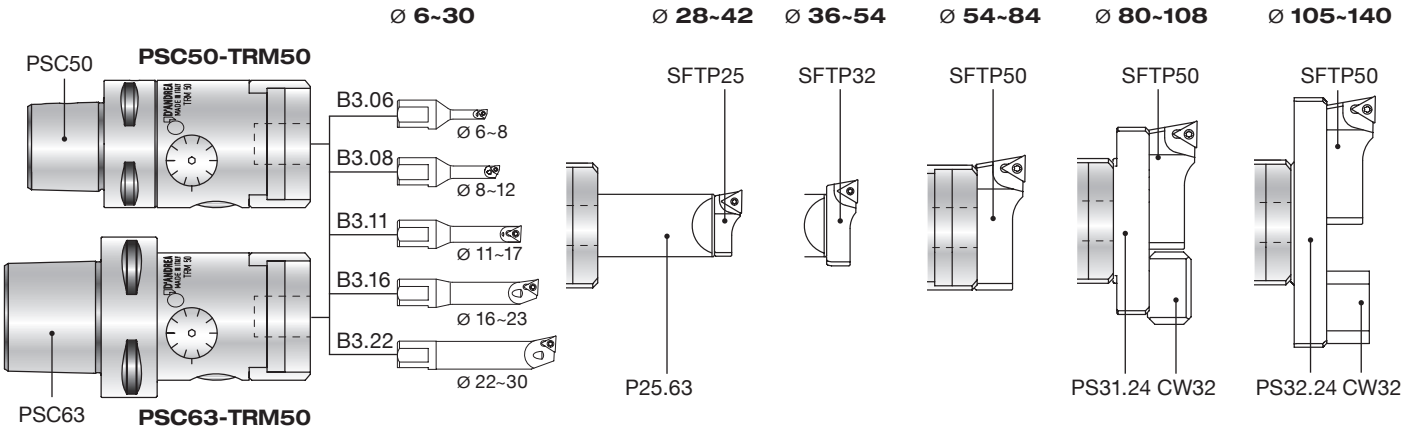

REF.	CODE			TORX T	kg		
B1.02	572010502001				0.02		
B1.04	572010504001				0.02		
B3.06	572010506001	WCGT0201..	TS 21	06	0.035		
B3.08	572010508001	WCGT0201..	TS 211	06	0.4		
B3.10	572010510001	TPGX0902..	CS 250 T	08	0.05		
B3.11	572010511001	TPGX0902..	CS 250 T	08	0.055		
B3.12	572010512001	TPGX0902..	CS 250 T	08	0.06		
B3.14	572010514001	TPGX0902..	CS 250 T	08	0.07		
B3.16	572010516001	TPGX0902..	CS 250 T	08	0.07		
B3.18	572010518001	TPGX0902..	CS 250 T	08	0.1		
B3.22	572010522001	TPGX0902..	CS 250 T	08	0.1		

REF.	CODE			TORX T	kg		
B5.06	572010506105	WCGT0201..	TS 21	06	0.075		
B5.08	572010508105	WCGT0201..	TS 211	06	0.09		
B5.10	572010510105	TPGX0902..	CS 250 T	08	0.1		
B5.12	572010512105	TPGX0902..	CS 250 T	08	0.1		
B5.14	572010514105	TPGX0902..	CS 250 T	08	0.2		
B5.16	572010516105	TPGX0902..	CS 250 T	08	0.3		
B8.06	572010506108	WCGT0201..	TS 21	06	0.065		
B8.08	572010508108	WCGT0201..	TS 211	06	0.08		
B8.10	572010510108	TPGX0902..	CS 250 T	08	0.1		
B8.12	572010512108	TPGX0902..	CS 250 T	08	0.2		
B8.14	572010514108	TPGX0902..	CS 250 T	08	0.2		
B8.16	572010516108	TPGX0902..	CS 250 T	08	0.3		

REF.	CODE			TORX T	kg		
SFTP25	470500525001	TPGX0902..	CS 250T	08	0.01		
SFTP32	470500532001	TPGX0902..	CS 250T	08	0.02		
SFTP50	470500550001	TPGX1103..	CS300890T	08	0.08		
SFTP51	470500550003	TCMT16T3..	TS 4	15	0.09		

REF.	CODE			TORX T	kg		
SFCC25	470500525002	CCGT0602..	TS 25	08	0.01		
SFCC32	470500532002	CCGT0602..	TS 25	08	0.02		
SFCC50	470500550002	CCGT09T3..	TS 4	15	0.08		
SFCC51	470500550004	CCMT1204..	TS 5	25	0.09		

- For back-facing machining see p.24

PSC63 - TRM63
Ø 2.5 ~ 155

PSC63 - TRM80
Ø 2.5 ~ 220

2 µm

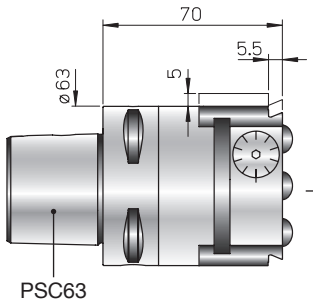

PSC63 TRM63

Ø 2.5~155

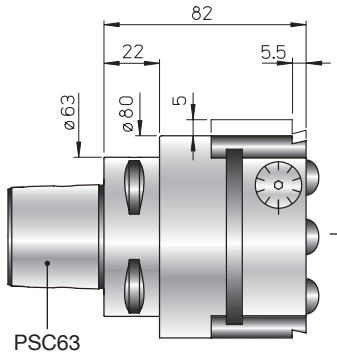

PSC63 TRM80

Ø 2.5~220

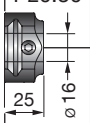

Tools | Vibration-damping | Carbide

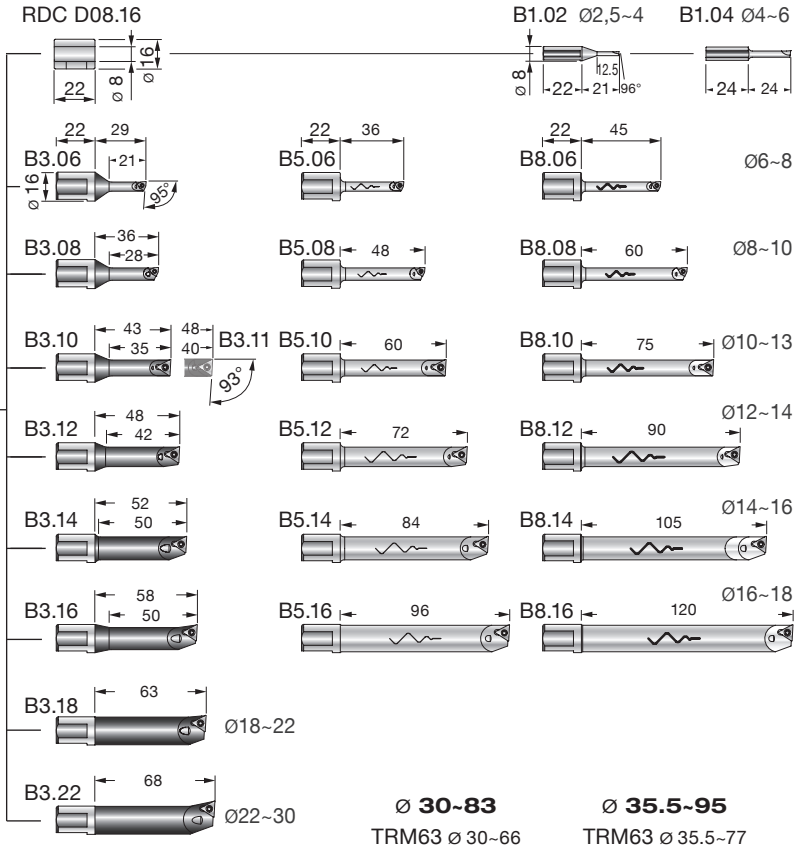

REF.	CODE	kg
PSC63-TRM63	71PSC063TR63080	1.5
PSC63-TRM80	71PSC063TR80080	2
D08.16	200560116082	0.02
P20.30	431030160300	0.2
P02.30	431030250400	0.3
P03.30	431030250700	0.4
P04.30	431030251150	0.7
PS 11.30	433030260750	0.4
PS 12.30	433030260950	0.5
PS 13.30	433030261400	0.7

On request supplied with coolant tube **PSC**. See p.57

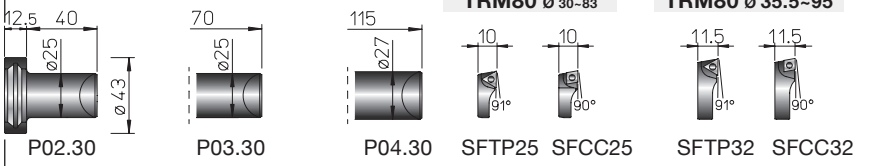

P02.30 P03.30 P04.30 SFTP25 SFCC25 SFTP32 SFCC32

Ø 30~83
TRM63 Ø 30~66
TRM80 Ø 30~83

Ø 35.5~95
TRM63 Ø 35.5~77
TRM80 Ø 35.5~95

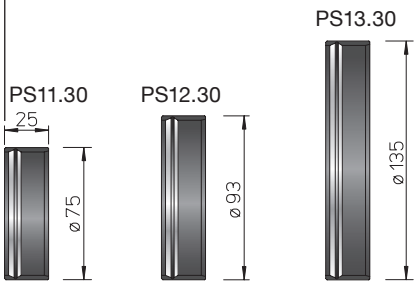

TRM63 Ø 77~100 | TRM63 - **TRM80** Ø 95~155 - **Ø 95~140** | **TRM80 Ø 140~220**

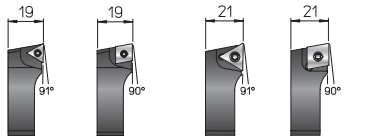

SFTP50 SFCC50 SFTP51 SFCC51

Ø 77~220

KIT K01 PSC63 - TRM63
Ø 6 ~ 155

1 PSC63 - TRM63

1 P20.30	1 B3.11
1 PS11.30	1 B3.16
1 PS12.30	1 B3.22
1 P02.30	1 SFTP25
1 P03.30	1 SFTP32
1 B3.06	1 SFTP50
1 B3.08	

5 TPGX 090202L DC100
1 TPGX 110302L DC100
2 WCGT 020102L DC 10

REF.	CODE	kg		
KIT K01 PSC63-TRM63	7KPSC063TR63081	5.5		

KIT K01 PSC63 - TRM80
Ø 6 ~ 220

1 PSC63 - TRM80

1 P20.30	1 B3.08
1 PS12.30	1 B3.11
1 PS13.30	1 B3.16
1 P02.30	1 B3.22
1 P03.30	1 SFTP25
1 P04.30	1 SFTP32
1 B3.06	1 SFTP50

5 TPGX 090202L DC100
1 TPGX 110302L DC100
2 WCGT 020102L DC 10

REF.	CODE	kg		
KIT K01 PSC63-TRM80	7KPSC063TR80080	6.5		

KIT K01 PSC63 - TRM63

Working Range

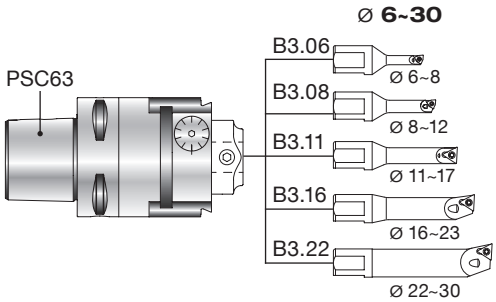

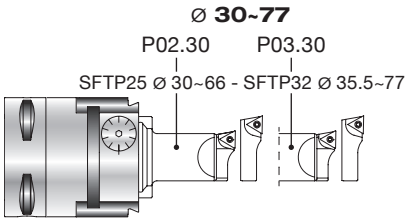

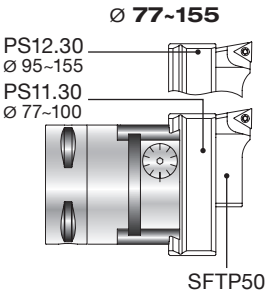

KIT K01 PSC63 - TRM80

Working Range

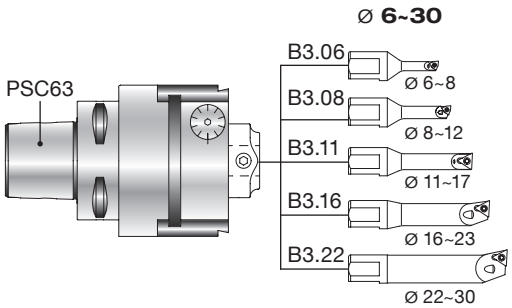

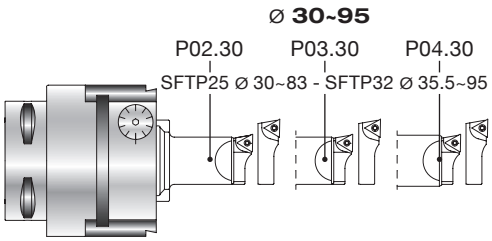

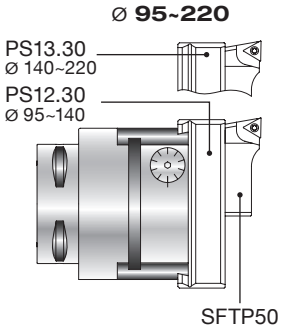

REF.	CODE			TORX T	kg		
B1.02	572010502001				0.02		
B1.04	572010504001				0.02		
B3.06	572010506001	WCGT0201..	TS 21	06	0.035		
B3.08	572010508001	WCGT0201..	TS 211	06	0.4		
B3.10	572010510001	TPGX0902..	CS 250 T	08	0.05		
B3.11	572010511001	TPGX0902..	CS 250 T	08	0.055		
B3.12	572010512001	TPGX0902..	CS 250 T	08	0.06		
B3.14	572010514001	TPGX0902..	CS 250 T	08	0.07		
B3.16	572010516001	TPGX0902..	CS 250 T	08	0.07		
B3.18	572010518001	TPGX0902..	CS 250 T	08	0.1		
B3.22	572010522001	TPGX0902..	CS 250 T	08	0.1		

REF.	CODE			TORX T	kg		
B5.06	572010506105	WCGT0201..	TS 21	06	0.075		
B5.08	572010508105	WCGT0201..	TS 211	06	0.09		
B5.10	572010510105	TPGX0902..	CS 250 T	08	0.1		
B5.12	572010512105	TPGX0902..	CS 250 T	08	0.1		
B5.14	572010514105	TPGX0902..	CS 250 T	08	0.2		
B5.16	572010516105	TPGX0902..	CS 250 T	08	0.3		
B8.06	572010506108	WCGT0201..	TS 21	06	0.065		
B8.08	572010508108	WCGT0201..	TS 211	06	0.08		
B8.10	572010510108	TPGX0902..	CS 250 T	08	0.1		
B8.12	572010512108	TPGX0902..	CS 250 T	08	0.2		
B8.14	572010514108	TPGX0902..	CS 250 T	08	0.2		
B8.16	572010516108	TPGX0902..	CS 250 T	08	0.3		

REF.	CODE			TORX T	kg		
SFTP25	470500525001	TPGX0902..	CS 250T	08	0.01		
SFTP32	470500532001	TPGX0902..	CS 250T	08	0.02		
SFTP50	470500550001	TPGX1103..	CS300890T	08	0.08		
SFTP51	470500550003	TCMT16T3..	TS 4	15	0.09		

REF.	CODE			TORX T	kg		
SFCC25	470500525002	CCGT0602..	TS 25	08	0.01		
SFCC32	470500532002	CCGT0602..	TS 25	08	0.02		
SFCC50	470500550002	CCGT09T3..	TS 4	15	0.08		
SFCC51	470500550004	CCMT1204..	TS 5	25	0.09		

- For back-facing machining see p.24

TCD’ is the turning tools offering made according to the ISO 26623-1 **PSC** standards for Application on MULTI-TASK machines. The **TCD’** line is offered with coolant through channels.

PSC - TU ISO 26623-1

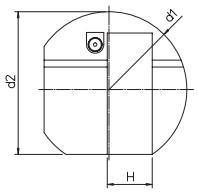

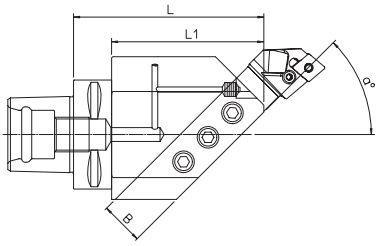

Right hand tool holder shown. A standard Application requires left hand tools with right hand adapters.

PSC	REF.	CODE	L	L1	d1	d2	a°	BxH	kg
50	**TCD’ PSC50 - TU20.45R**	71PSC050T2045R1	90	70	72	65	45°	20x20	1.8
50	**TCD’ PSC50 - TU20.45L**	71PSC050T2045L1	90	70	72	65	45°	20x20	1.8
63	**TCD’ PSC63 - TU25.45R**	71PSC063T2545R1	110	88	90	82.5	45°	25x25	3.5
63	**TCD’ PSC63 - TU25.45L**	71PSC063T2545L1	110	88	90	82.5	45°	25x25	3.5
80	**TCD’ PSC80 - TU32.45R**	71PSC080T3245R1	135	105	115	98.5	45°	32x32	6.4
80	**TCD’ PSC80 - TU32.45L**	71PSC080T3245L1	135	105	115	98.5	45°	32x32	6.4

PSC - TU ISO 26623-1

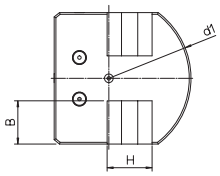

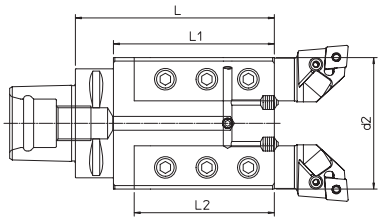

PSC	REF.	CODE	L	L1	L2	d1	d2	BxH	kg
50	**TCD’ PSC50 - TU20.02**	71PSC050T200201	100	80	64	80	63	20x20	2.5
63	**TCD’ PSC63 - TU25.02**	71PSC063T250201	115	93	80	95	76	25x25	4
80	**TCD’ PSC80 - TU32.02**	71PSC080T320201	125	95	80	115	86	32x32	6.2

PSC - TU ISO 26623-1

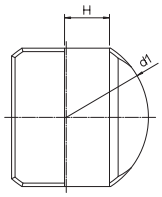

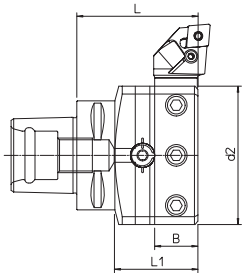

PSC	REF.	CODE	L	L1	d1	d2	BxH	kg
50	**TCD’ PSC50 - TU20.90**	71PSC050T209001	60	40	80	64	20x20	1.4
63	**TCD’ PSC63 - TU25.90**	71PSC063T259001	70	48	95	80	25x25	2.6
80	**TCD’ PSC80 - TU32.90**	71PSC080T329001	85	55	133	105	32x32	5.2

PSC - D... ISO 26623-1

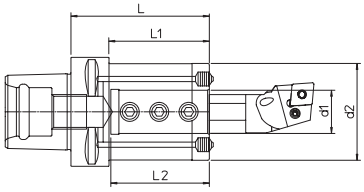

Reduction bushes on request

PSC	REF.	CODE	$d1^{H7}$	d2	L	L1	L2	kg
50	**TCD’ PSC50 - D.25x80**	71PSC050D250801	25	56	80	60	58	1.4
63	**TCD’ PSC63 - D.25x80**	71PSC063D250801	25	56	80	58	58	1.7
63	**TCD’ PSC63 - D.40x125**	71PSC063D401201	40	80	125	103	85	3.9
80	**TCD’ PSC80 - D.25x85**	71PSC080D250801	25	56	85	55	58	2.6
63	**TCD’ PSC80 - D.40x125**	71PSC080D401201	40	80	125	95	85	4.6

On request supplied with coolant tube **PSC**. See p.57

BHT 250 - 500 - 750

CROSS BARS

ROUGHING

COUPLING
HT®

FINISHING - TURNING

2 µm

COUPLING
HT®

The new **BHT** boring system is characterized by the new **HT** standard base connection which ensures perfect coupling and high resistance to torsion.
The **BHT** bars cover a working range from Ø 250 to Ø 1000 mm, both in roughing and finishing.
The wide range of accessories includes adjustable ISO-CA roughing cartridges and a TRM 63 STANDARD micrometric finishing head, capable of carrying out boring, chamfering and back-boring operations.
The FINISHING configuration system can be balanced with the addition of counterweights.

ROUGHING

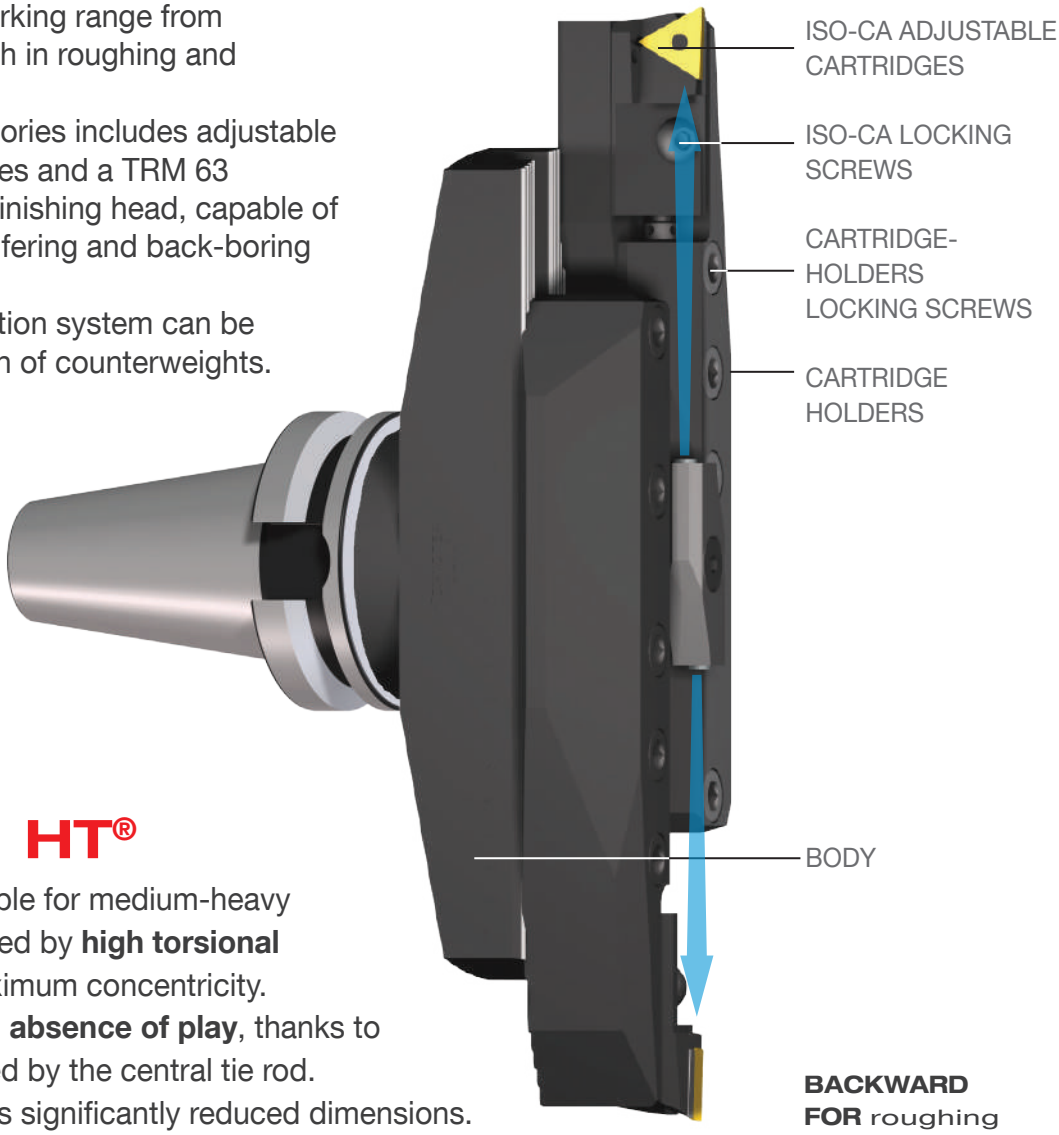

COUPLING HT®

1. The HT system is suitable for medium-heavy machining, characterized by **high torsional components** with maximum concentricity.
2. The guarantee the total **absence of play**, thanks to the pulling force exerted by the central tie rod.
3. The new HT system has significantly reduced dimensions.
4. It facilitates the axial coolant channels.
5. The arbors are made with hardness HRc 55-60.

BACKWARD FOR roughing operations **USE TS 63/63 +SSQC 63**
see page 24

POLYGONAL SHANK HT COUPLING, CONTACT AND DRIVING SURFACES

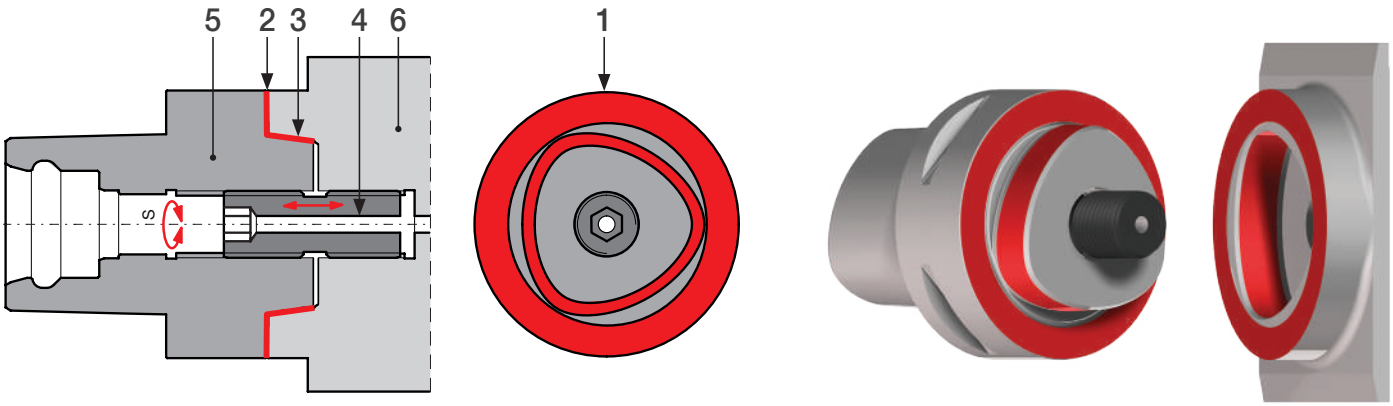

HT	⬡ S	N·m
8	8	50 - 60

FINISHING - TURNING

2 µm

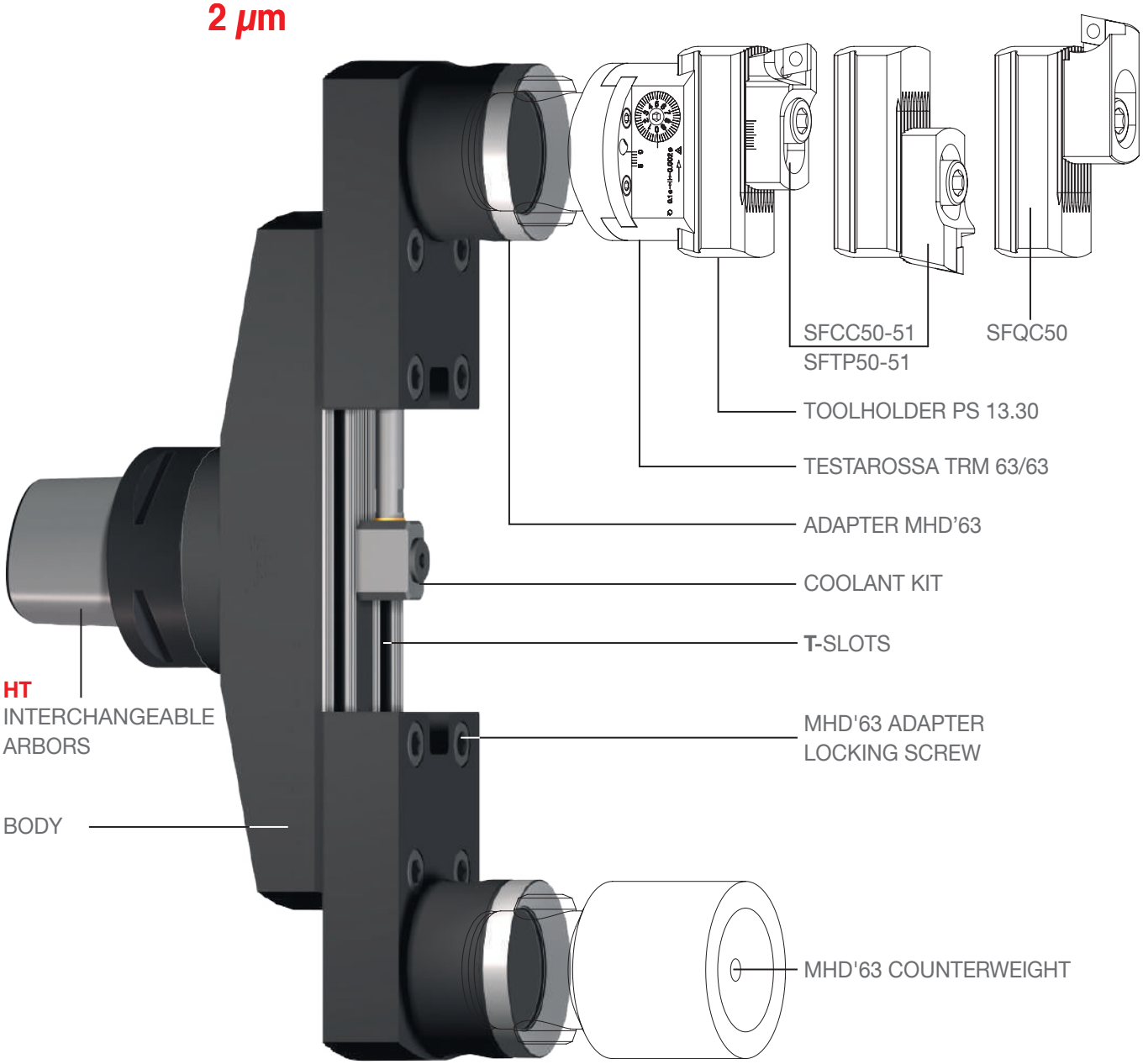

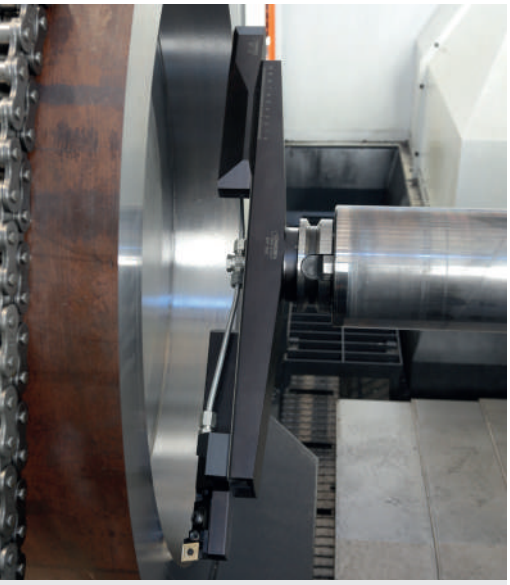

ROUGHING

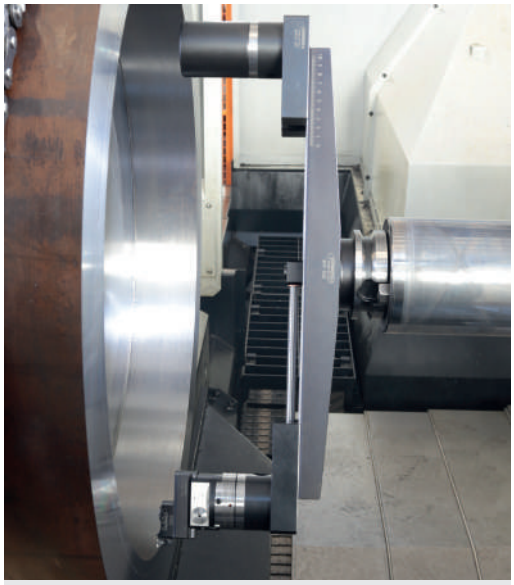

FINISHING

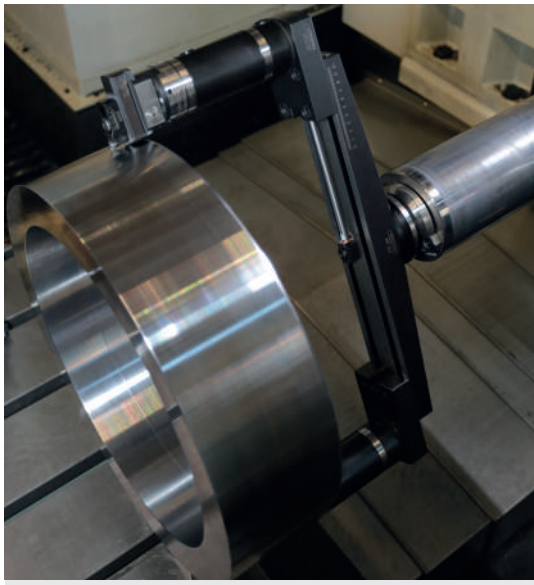

TURNING

ARBORS HT PATENTED

BHT 250 Ø 250 ~ 500

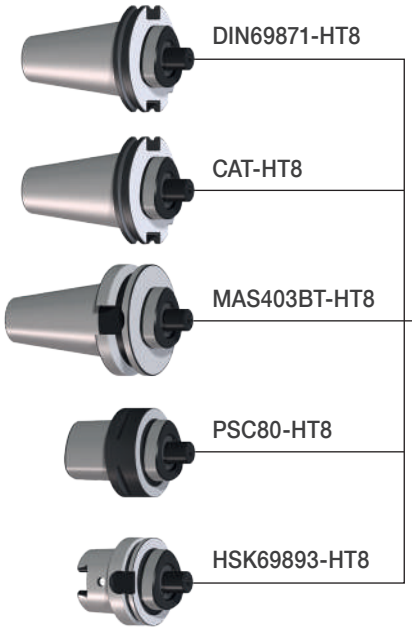

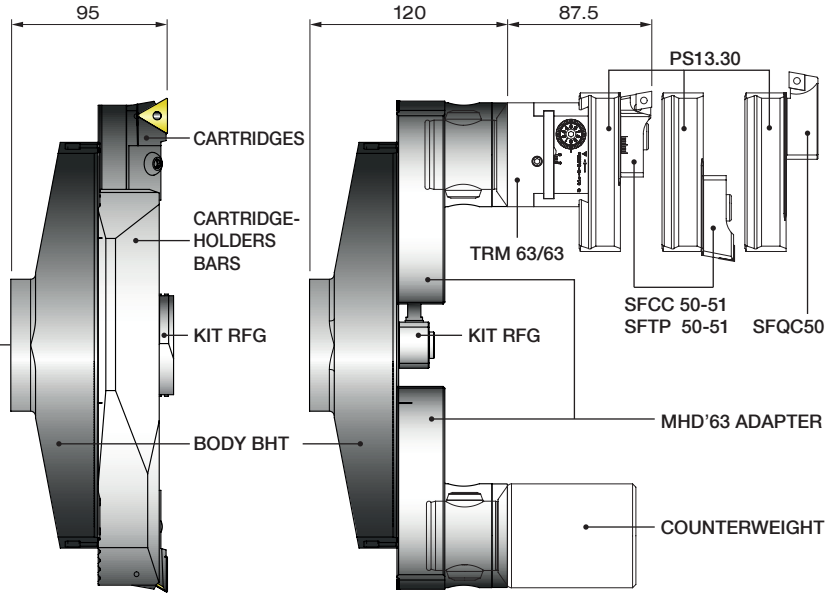

	REF.	CODE	kg
DIN 69871-AD50	HT8 .36.5	41HT08025000	3.4
CAT 50 UNC	HT8 .50.5	41HT08055000	3.9
MAS403BT-AD50	HT8 .38.5	41HT08035000	3.7
PSC 80	HT8 .30	41HT08018000	2
HSK 100	HT8 .76.5	41HT08041000	4

ISO-CA CARTRIDGE HOLDERS

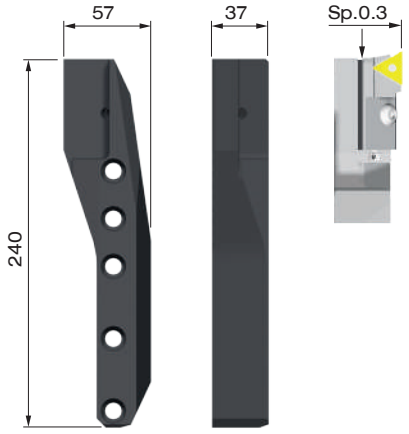

ISO-CA CARTRIDGE HOLDERS BHT 250-500-750

CODE	382090024000	kg 2.5

CARTRIDGES 20CA ISO 5611

PTGNL20CA-22	
CODE 483010201001	
TNM2204	

SCGCL20CA-12	
CODE 483010201003	
CCM1204	

PCGNL20CA-16	
CODE 483010201002	
CNM1606	

PSRNL20CA-15	
CODE 483010201004	
SNM1506	

COMPONENTS AND ACCESSORIES

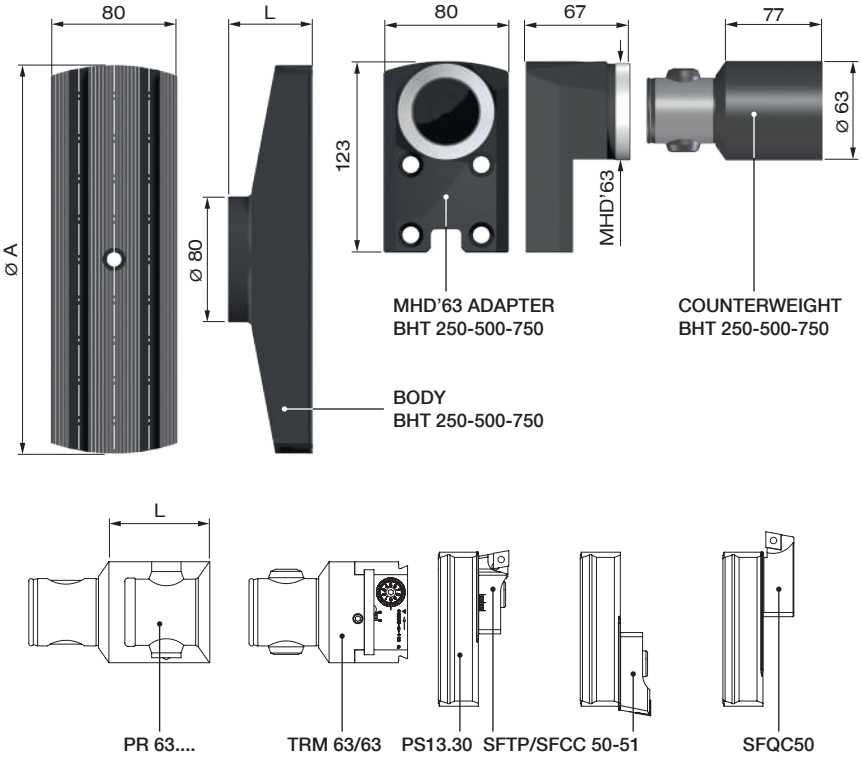

REF.		CODE	Ø ROUGHING Ø FINISHING	Ø TURNING	A	L	kg
BODY BHT 250		435508882460	250 ~ 500	max 250	246	54	4.0
BODY BHT 500		435508882960	500 ~ 750	max 470	496	54	7.2
BODY BHT 750		435508887460	750 ~ 1000	max 720	746	60	13.0
MHD'63 ADAPTER	BHT 250-500-750	382090006301					2.5
COUNTERWEIGHT	BHT 250-500-750	392011006300					2.4
TRM 63/63	BHT 250-500-750	455006300631					1.5
PS 13.30	BHT 250-500-750	433030261400					0.7
PR 63.63	BHT 250-500-750	656906300630				63	1.4
PR 63.100	BHT 250-500-750	656906301000				100	2.2
PR 63.125	BHT 250-500-750	656906301250				125	2.9

BHT suitable for bigger diameters ON REQUEST

BHT 500 ⌀ 500 ~ 750

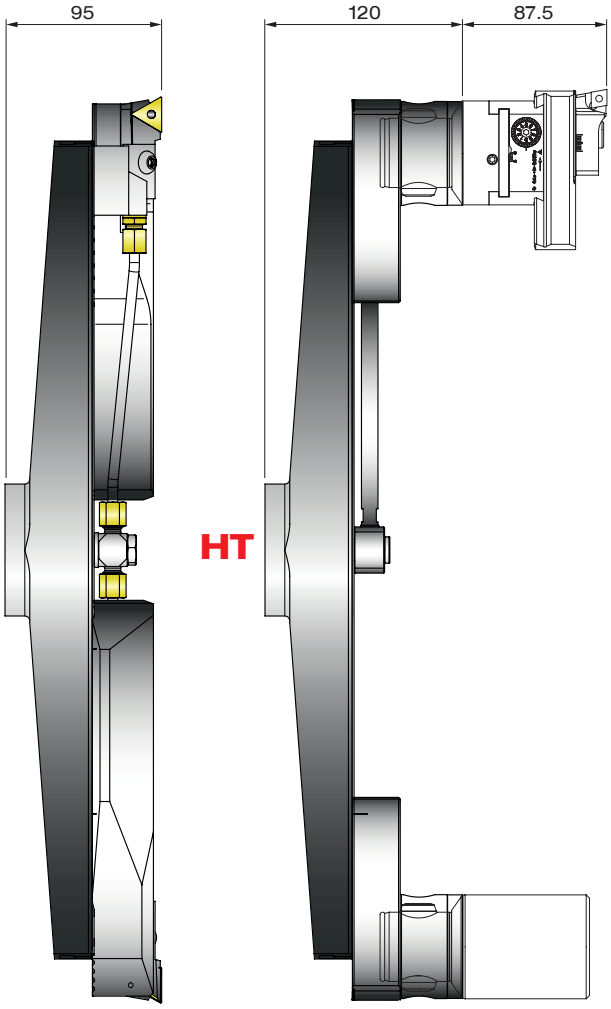

BHT 750 ⌀ 750 ~ 1000

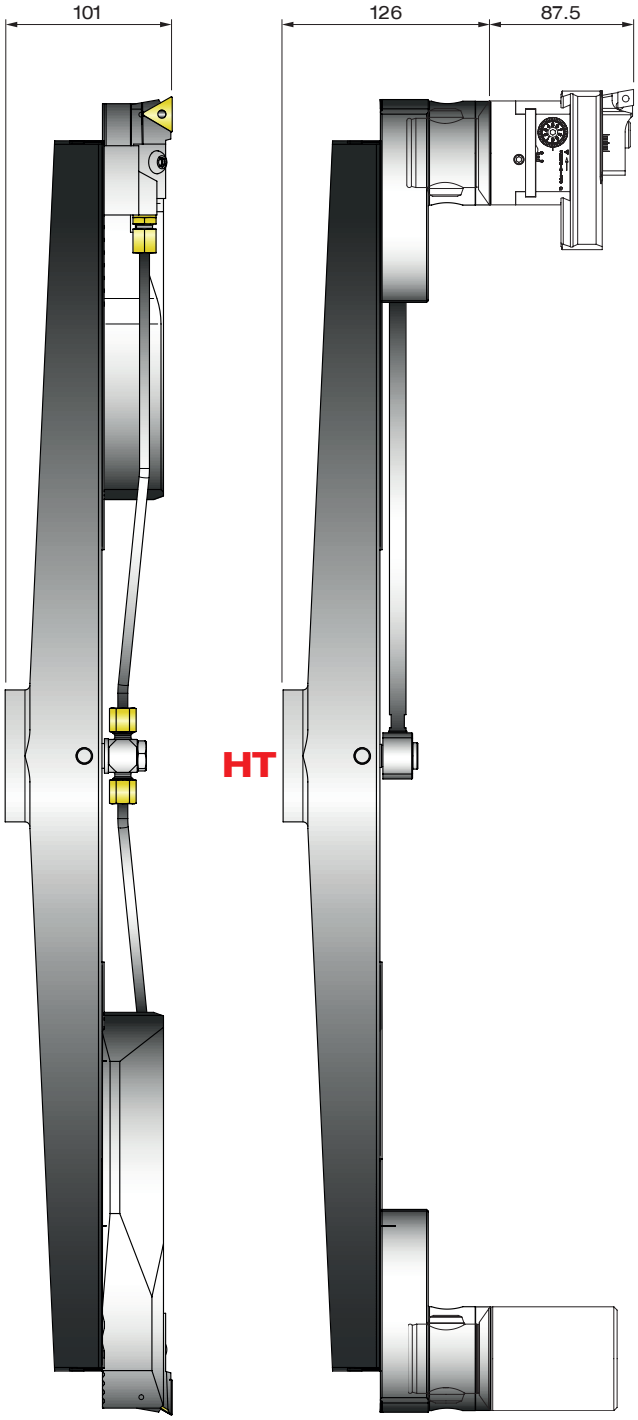

COOLANT KIT

ROUGHING

KIT RFG BHT 250 SG	
CODE	382090025000

FINISHING

KIT RFG BHT 250 FN	
CODE	382090025001

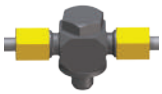

KIT RFG BHT 500 SG	
CODE	382090050003

KIT RFG BHT 500 FN	
CODE	382090050004

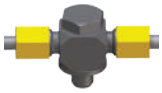

KIT RFG BHT 750 SG	
CODE	382090075000

KIT RFG BHT 750 FN	
CODE	382090075001

BIT-HOLDERS SF..

SFTP50
SFTP51

SFCC50
SFCC51

SFQC50

REF.	CODE			TORX	kg
SFTP50	470500550001	TPGX 1103..	CS300890T	08	0.08
SFTP51	470500550003	TCMT 16T3..	TS 4	15	0.09
SFCC50	470500550002	CCGT 09T3..	TS 4	15	0.08
SFCC51	470500550004	CCMT 1204..	TS 5	25	0.09
SFQC50	470500550062	CCMT 09T3..	TS 4	15	0.1

WCGT ○○○○○○○L

FINISHING

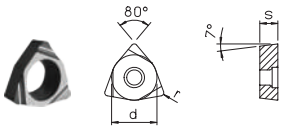

REF.		CODE	d	s	r		
WCGT 020102L DC 100	CERMET	WCGT020102LC100	3.97	1.59	0.2	TS 21* - TS 211*	TORX T06
WCGT 020102L DC 100T	COATED CERMET	WCGT020102LC10T	3.97	1.59	0.2	TS 21* - TS 211*	TORX T06
WCGT 020102L DK 100	CARBIDE	WCGT020102LK100	3.97	1.59	0.2	TS 21* - TS 211*	TORX T06
WCGT 020102L DP 300	CARBIDE	WCGT020102LP300	3.97	1.59	0.2	TS 21* - TS 211*	TORX T06
WCGT 020104L DC 100	CERMET	WCGT020104LC100	3.97	1.59	0.4	TS 21* - TS 211*	TORX T06
WCGT 020104L DC 100T	COATED CERMET	WCGT020104LC10T	3.97	1.59	0.4	TS 21* - TS 211*	TORX T06
WCGT 020104L DK 100	CARBIDE	WCGT020104LK100	3.97	1.59	0.4	TS 21* - TS 211*	TORX T06
WCGT 020104L DP 300	CARBIDE	WCGT020104LP300	3.97	1.59	0.4	TS 21* - TS 211*	TORX T06

* TS21 : B...06 / * TS211 : B...08

CCGT ○○○○○○○L

FINISHING

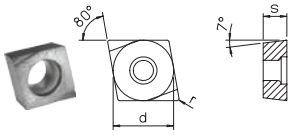

REF.		CODE	d	s	r		
CCGT 060200L DC 100	CERMET	CCGT060200LC100	6.35	2.38	0	TS 25	TORX T08
CCGT 060200L DC 100T	COATED CERMET	CCGT060200LC10T	6.35	2.38	0	TS 25	TORX T08
CCGT 060200L DK 100	CARBIDE	CCGT060200LK100	6.35	2.38	0	TS 25	TORX T08
CCGT 060200L DP 300	CARBIDE	CCGT060200LP300	6.35	2.38	0	TS 25	TORX T08
CCGT 060202L DC 100	CERMET	CCGT060202LC100	6.35	2.38	0.2	TS 25	TORX T08
CCGT 060202L DC 100T	COATED CERMET	CCGT060202LC10T	6.35	2.38	0.2	TS 25	TORX T08
CCGT 060202L DK 100	CARBIDE	CCGT060202LK100	6.35	2.38	0.2	TS 25	TORX T08
CCGT 060202L DP 300	CARBIDE	CCGT060202LP300	6.35	2.38	0.2	TS 25	TORX T08
CCGT 060204L DC 100	CERMET	CCGT060204LC100	6.35	2.38	0.4	TS 25	TORX T08
CCGT 060204L DC 100T	COATED CERMET	CCGT060204LC10T	6.35	2.38	0.4	TS 25	TORX T08
CCGT 060204L DK 100	CARBIDE	CCGT060204LK100	6.35	2.38	0.4	TS 25	TORX T08
CCGT 060204L DP 300	CARBIDE	CCGT060204LP300	6.35	2.38	0.4	TS 25	TORX T08
CCGT 09T302L DC 100	CERMET	CCGT09T302LC100	9.525	3.97	0.2	TS 4	TORX T15
CCGT 09T302L DC 100T	COATED CERMET	CCGT09T302LC10T	9.525	3.97	0.2	TS 4	TORX T15
CCGT 09T302L DK 100	CARBIDE	CCGT09T302LK100	9.525	3.97	0.2	TS 4	TORX T15
CCGT 09T302L DP 300	CARBIDE	CCGT09T302LP300	9.525	3.97	0.2	TS 4	TORX T15
CCGT 09T304L DC 100	CERMET	CCGT09T304LC100	9.525	3.97	0.4	TS 4	TORX T15
CCGT 09T304L DC 100T	COATED CERMET	CCGT09T304LC10T	9.525	3.97	0.4	TS 4	TORX T15
CCGT 09T304L DK 100	CARBIDE	CCGT09T304LK100	9.525	3.97	0.4	TS 4	TORX T15
CCGT 09T304L DP 300	CARBIDE	CCGT09T304LP300	9.525	3.97	0.4	TS 4	TORX T15

TPGX ○○○○○○○L

FINISHING

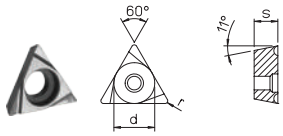

REF.		CODE	d	s	r		
TPGX 090200L DC 100	CERMET	TPGX090200LC100	5.56	2.38	0	CS250T	TORX T08
TPGX 090200L DC 100T	COATED CERMET	TPGX090200LC10T	5.56	2.38	0	CS250T	TORX T08
TPGX 090200L DK 100	CARBIDE	TPGX090200LK100	5.56	2.38	0	CS250T	TORX T08
TPGX 090200L DP 300	CARBIDE	TPGX090200LP300	5.56	2.38	0	CS250T	TORX T08
TPGX 090202L DC 100	CERMET	TPGX090202LC100	5.56	2.38	0.2	CS250T	TORX T08
TPGX 090202L DC 100T	COATED CERMET	TPGX090202LC10T	5.56	2.38	0.2	CS250T	TORX T08
TPGX 090202L DK 100	CARBIDE	TPGX090202LK100	5.56	2.38	0.2	CS250T	TORX T08
TPGX 090202L DP 300	CARBIDE	TPGX090202LP300	5.56	2.38	0.2	CS250T	TORX T08
TPGX 090204L DC 100	CERMET	TPGX090204LC100	5.56	2.38	0.4	CS250T	TORX T08
TPGX 090204L DC 100T	COATED CERMET	TPGX090204LC10T	5.56	2.38	0.4	CS250T	TORX T08
TPGX 090204L DK 100	CARBIDE	TPGX090204LK100	5.56	2.38	0.4	CS250T	TORX T08
TPGX 090204L DP 300	CARBIDE	TPGX090204LP300	5.56	2.38	0.4	CS250T	TORX T08
TPGX 110300L DC 100	CERMET	TPGX110300LC100	6.35	3.18	0	CS300890T	TORX T08
TPGX 110300L DC 100T	COATED CERMET	TPGX110300LC10T	6.35	3.18	0	CS300890T	TORX T08
TPGX 110300L DK 100	CARBIDE	TPGX110300LK100	6.35	3.18	0	CS300890T	TORX T08
TPGX 110300L DP 300	CARBIDE	TPGX110300LP300	6.35	3.18	0	CS300890T	TORX T08
TPGX 110302L DC 100	CERMET	TPGX110302LC100	6.35	3.18	0.2	CS300890T	TORX T08
TPGX 110302L DC 100T	COATED CERMET	TPGX110302LC10T	6.35	3.18	0.2	CS300890T	TORX T08
TPGX 110302L DK 100	CARBIDE	TPGX110302LK100	6.35	3.18	0.2	CS300890T	TORX T08
TPGX 110302L DP 300	CARBIDE	TPGX110302LP300	6.35	3.18	0.2	CS300890T	TORX T08
TPGX 110304L DC 100	CERMET	TPGX110304LC100	6.35	3.18	0.4	CS300890T	TORX T08
TPGX 110304L DC 100T	COATED CERMET	TPGX110304LC10T	6.35	3.18	0.4	CS300890T	TORX T08
TPGX 110304L DK 100	CARBIDE	TPGX110304LK100	6.35	3.18	0.4	CS300890T	TORX T08
TPGX 110304L DP 300	CARBIDE	TPGX110304LP300	6.35	3.18	0.4	CS300890T	TORX T08

INSERT CLAMPING SCREWS

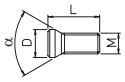

REF.	CODE		M	L	D	α	N·m
TS 21	494010002034		M 2x0.4	3.7	2.7	60°	0,5
TS 211	494010002040		M 2x0.4	4	2.7	60°	0,5
CS 250 T	494010002565		M 2.5x0.45	6	3.7	90°	1,0
CS 300890 T	494010003008		M 3x0.5	8	4.1	90°	1,0
TS 25	494010002555		M 2.5x0.45	5.7	3.45	60°	1,0
TS 4	494010004008		M 4x0.7	10	5.5	60°	3,0
TS 5	494010005009		M 5x0.8	11.5	7	60°	7,5

TORX WRENCH

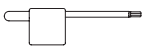

REF.	CODE
TORX T06	101500900600
TORX T06	101500900600
TORX T08	101500900800
TORX T08	101500900800
TORX T08	101500900800
TORX T15	101500901500
TORX T25	101500902500

TPGX ○○○○○○
FINISHING

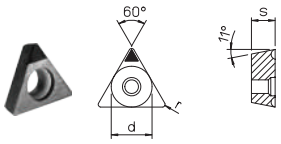

REF.		CODE	d	s	r		
TPGX 090202 D20 MDC	SINTERED DIAMOND	TPGX090202MDC20	5.56	2.38	0.2	CS250T	TORX T08
TPGX 090204 D20 MDC		TPGX090204MDC20	5.56	2.38	0.4	CS250T	TORX T08
TPGX 110302 D20 MDC		TPGX110302MDC20	6.35	3.18	0.2	CS300890T	TORX T08
TPGX 110304 D20 MDC		TPGX110304MDC20	6.35	3.18	0.4	CS300890T	TORX T08
TPGX 090202 D20 CBN	CUBIC BORON NITRIDE	TPGX090202CBN20	5.56	2.38	0.2	CS250T	TORX T08
TPGX 090202 D25 CBN		TPGX090202CBN25	5.56	2.38	0.2	CS250T	TORX T08
TPGX 090204 D20 CBN		TPGX090204CBN20	5.56	2.38	0.4	CS250T	TORX T08
TPGX 090204 D25 CBN		TPGX090204CBN25	5.56	2.38	0.4	CS250T	TORX T08
TPGX 110302 D25 CBN		TPGX110302CBN25	6.35	3.18	0.2	CS300890T	TORX T08
TPGX 110304 D20 CBN		TPGX110304CBN20	6.35	3.18	0.4	CS300890T	TORX T08
TPGX 110304 D25 CBN		TPGX110304CBN25	6.35	3.18	0.4	CS300890T	TORX T08

CCMT ○○○○○○
ROUGHING

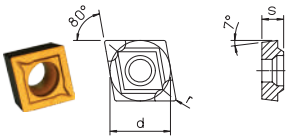

REF.		CODE	d	s	r		
CCMT 060202 DP 100R	CVD COATED CARBIDE	CCMT060202P100R	6.35	2.38	0.2	TS 25	TORX T08
CCMT 060202 DP 300	CARBIDE	CCMT060202P300	6.35	2.38	0.2	TS 25	TORX T08
CCMT 060204 DP 100R	CVD COATED CARBIDE	CCMT060204P100R	6.35	2.38	0.4	TS 25	TORX T08
CCMT 060204 DP 300	CARBIDE	CCMT060204P300	6.35	2.38	0.4	TS 25	TORX T08
CCMT 09T304 DP 100R	CVD COATED CARBIDE	CCMT09T304P100R	9.525	3.97	0.4	TS 4	TORX T15
CCMT 09T304 DP 300	CARBIDE	CCMT09T304P300	9.525	3.97	0.4	TS 4	TORX T15
CCMT 09T308 DP 100R	CVD COATED CARBIDE	CCMT09T308P100R	9.525	3.97	0.8	TS 4	TORX T15
CCMT 09T308 DP 300	CARBIDE	CCMT09T308P300	9.525	3.97	0.8	TS 4	TORX T15
CCMT 120404 DP 100R	CVD COATED CARBIDE	CCMT120404P100R	12.7	4.76	0.4	TS 5	TORX T25
CCMT 120404 DP 300	CARBIDE	CCMT120404P300	12.7	4.76	0.4	TS 5	TORX T25
CCMT 120408 DP 100R	CVD COATED CARBIDE	CCMT120408P100R	12.7	4.76	0.8	TS 5	TORX T25
CCMT 120408 DP 300	CARBIDE	CCMT120408P300	12.7	4.76	0.8	TS 5	TORX T25

BORING GRADE

ISO	CARBIDE	CERMET	COATED CERMET	CVD COATED CARBIDE
P01				
P10		DC100	DC100T	DP100R
P20				
P30	DP300			
P40				
K01				
K10	DK100	DC100	DC100T	DP100R
K20	DP300			
K30				

DP300	Roughing and finishing. Low carbon steel - stainless steels
DK100	Roughing and finishing. Aluminium alloy cast iron
DP100R	Roughing. Steels, alloy steels and cast iron
DC100	Finishing. Alloy steels and cast iron
DC100T	Finishing. Alloy steels, stainless steels and cast iron
D20MDC	Finishing. Aluminium alloys, non-ferrous materials and non-metals
D20CBN	Finishing. High hardness steels (over 50 HRC) (it may replace the grinding)
D25CBN	Finishing. High hardness steels (over 50 HRC) and interrupted cutting (it may replace the grinding)

RECOMMENDED CUTTING CONDITIONS FOR ROUGHING OPERATIONS **WITH DOUBLE-BIT HEADS TS**

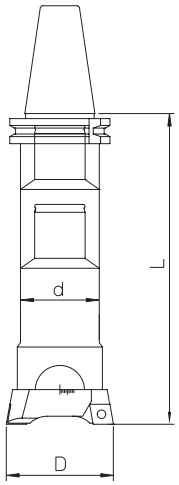

material	boring bar dimensions	working conditions	cutting speed Vc = m/min. diameter			feed fn = mm/rev (twin cutters) insert radius		
			D < 38	D = 38~120	D > 120	R = 0.2	R = 0.4	R = 0.8
carbon steel HB ≤ 200	L / d = 2.5	good	120 - 180	140 - 200	160 - 250		0.2 - 0.4	0.3 - 0.5
	L / d = 4	normal	100 - 160	120 - 180	140 - 200		0.2 - 0.4	0.3 - 0.5
	L / d = 6.3	difficult	70 - 100	70 - 100	70 - 100	0.15 - 0.3	0.2 - 0.4	
carbon steel HB > 200	L / d = 2.5	good	100 - 160	120 - 180	140 - 200		0.2 - 0.4	0.3 - 0.5
	L / d = 4	normal	80 - 140	100 - 160	120 - 180		0.2 - 0.4	0.3 - 0.5
	L / d = 6.3	difficult	60 - 90	70 - 100	70 - 100	0.15 - 0.3	0.2 - 0.4	
stainless steel AISI 304 - 316	L / d = 2.5	good	80 - 110	90 - 120	100 - 140		0.2 - 0.4	0.3 - 0.5
	L / d = 4	normal	70 - 100	80 - 110	90 - 120		0.2 - 0.4	0.3 - 0.5
	L / d = 6.3	difficult	60 - 90	60 - 90	60 - 90	0.15 - 0.3	0.2 - 0.4	
cast iron	L / d = 2.5	good	90 - 120	100 - 140	120 - 160		0.2 - 0.4	0.3 - 0.5
	L / d = 4	normal	70 - 100	90 - 120	100 - 140		0.2 - 0.4	0.3 - 0.5
	L / d = 6.3	difficult	60 - 90	60 - 90	60 - 90	0.15 - 0.3	0.2 - 0.4	
aluminium	L / d = 2.5	good	160 - 250	200 - 300	250 - 350		0.3 - 0.5	0.4 - 0.6
	L / d = 4	normal	140 - 200	160 - 250	200 - 300		0.3 - 0.5	0.4 - 0.6
	L / d = 6.3	difficult	100 - 150	100 - 150	100 - 150	0.2 - 0.4	0.3 - 0.5	

cutting depth ap = mm	working range Ø = mm	max. cutting depth steel	cast iron, aluminium
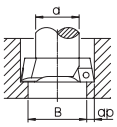	18 - 28	1.5 - 2	2 - 2.5
	28 - 50	2 - 3	2.5 - 3.5
	50 - 68	3 - 4	3.5 - 5
	68 - 200	4 - 5	5 - 7
	200 - 500	5 - 6	6 - 8

It's advisable to start with B hole ≥ the boring bar diameter d.

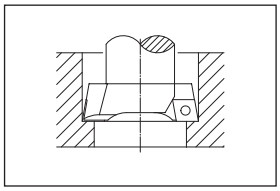

Twin cutters at the same cutting diameter

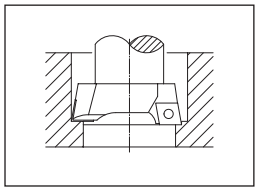

Twin cutters at different cutting diameters

ATTENTION: For boring operations at different diameters, reduce to a half the feed indicated on the above table.

RECOMMENDED CUTTING CONDITIONS FOR BORING OPERATIONS **WITH TESTAROSSA TRM / TRC / TR-E**

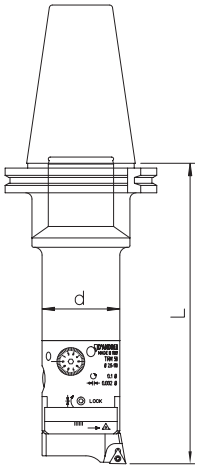

material	boring bar dimensions	working conditions	cutting speed Vc= m/min.	feed fn = mm/rev insert radius R = 0.0	R = 0.2	R = 0.4	quality insert	cutting depth
carbon steel HB ≤ 200	L / d = 2.5	good	200 - 300		0.05 - 0.08	0.07 - 0.1	DC100 DP300	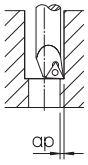 ap 0.1 - 0.25 mm
	L / d = 4	normal	160 - 250		0.05 - 0.08	0.07 - 0.1		
	L / d = 6.3	difficult	70 - 100	0.05 - 0.08	0.05 - 0.08			
carbon steel HB > 200	L / d = 2.5	good	160 - 250		0.05 - 0.08	0.07 - 0.1	DC100	
	L / d = 4	normal	150 - 200		0.05 - 0.08	0.07 - 0.1		
	L / d = 6.3	difficult	70 - 100	0.05 - 0.08	0.05 - 0.08			
stainless steel AISI 304 - 316	L / d = 2.5	good	120 - 160		0.05 - 0.08	0.07 - 0.1	DP300	
	L / d = 4	normal	100 - 140		0.05 - 0.08	0.07 - 0.1		
	L / d = 6.3	difficult	70 - 100	0.05 - 0.08	0.05 - 0.08			
cast iron	L / d = 2.5	good	120 - 160		0.05 - 0.08	0.07 - 0.1	DK100 DP100	
	L / d = 4	normal	100 - 140		0.05 - 0.08	0.07 - 0.1		
	L / d = 6.3	difficult	70 - 100	0.05 - 0.08	0.05 - 0.08			
aluminium	L / d = 2.5	good	300 - 400		0.05 - 0.08	0.07 - 0.1	DK100	
	L / d = 4	normal	250 - 350		0.05 - 0.08	0.07 - 0.1		
	L / d = 6.3	difficult	100 - 150	0.05 - 0.08	0.05 - 0.08			
steel HB > 200	L / d = 2.5	good	80 - 100		0.04 - 0.06	0.05 - 0.07	D20CBN	
	L / d = 4	normal	80 - 100		0.04 - 0.06	0.05 - 0.07		

CALCULATION FORMULAS FOR BORING

Vc cutting speed (m/min.)
D diameter of workpiece (mm)
n number of revolutions / min' (rev./min)
Vf feed rate (mm/min.)
fn feed / rev. (mm/rev)
π 3.14

$$Vc = \frac{\pi \cdot D \cdot n}{1000}$$

$$n = \frac{Vc \cdot 1000}{\pi \cdot D}$$

$$Vf = n \cdot fn$$

RECOMMENDED CUTTING CONDITIONS FOR ROUGHING OPERATIONS**BHT 250-500-750**

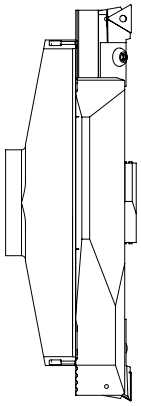

material	boring bar dimensions	working conditions	cutting speed Vc= m/min.	feed fn = mm/rev (twin cutters) insert radius R = 0.4	feed fn = mm/rev (twin cutters) insert radius R = 0.8	cutting depth steel	cutting depth cast iron aluminium
carbon steel HB ≤ 200	L / d = 2.5	good	160 - 250	0.2 - 0.4	0.3 - 0.5	1.5 - 8 mm	1.5 - 10 mm
	L / d = 4	normal	140 - 200	0.2 - 0.4	0.3 - 0.5		
carbon steel HB > 200	L / d = 2.5	good	140 - 200	0.2 - 0.4	0.3 - 0.5		
	L / d = 4	normal	120 - 180	0.2 - 0.4	0.3 - 0.5		
stainless steel AISI 304 - 316	L / d = 2.5	good	100 - 140	0.2 - 0.4	0.3 - 0.5		
	L / d = 4	normal	80 - 120	0.2 - 0.4	0.3 - 0.5		
cast iron ductile cast iron	L / d = 2.5	good	120 - 160	0.2 - 0.4	0.3 - 0.5		
	L / d = 4	normal	100 - 140	0.2 - 0.4	0.3 - 0.5		
aluminium	L / d = 2.5	good	250 - 350	0.3 - 0.5	0.4 - 0.6		
	L / d = 4	normal	200 - 300	0.3 - 0.5	0.4 - 0.6		

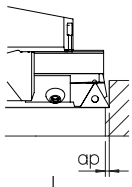

RECOMMENDED CUTTING CONDITIONS FOR FINISHING OPERATIONS CON **BHT 250-500-750**

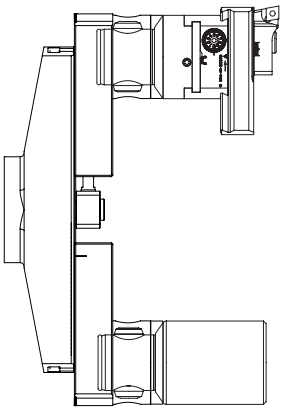

material	boring bar dimensions	working conditions	cutting speed Vc= m/min.	feed fn = mm/rev insert radius R = 0.2	feed fn = mm/rev insert radius R = 0.4	cutting depth	quality insert
carbon steel HB ≤ 200	L / d = 2.5	good	200 - 300	0.05 - 0.08	0.07 - 0.1	0.15 - 0.3 mm	DC100 DP300
	L / d = 4	normal	150 - 250	0.05 - 0.08	0.07 - 0.1		
carbon steel HB > 200	L / d = 2.5	good	160 - 250	0.05 - 0.08	0.07 - 0.1		DC100 DC100T
	L / d = 4	normal	140 - 200	0.05 - 0.08	0.07 - 0.1		
stainless steel AISI 304 - 316	L / d = 2.5	good	90 - 140	0.05 - 0.08	0.07 - 0.1		DP300
	L / d = 4	normal	80 - 120	0.05 - 0.08	0.07 - 0.1		
cast iron ductile cast iron	L / d = 2.5	good	120 - 180	0.05 - 0.08	0.07 - 0.1		DK100 DC100
	L / d = 4	normal	100 - 140	0.05 - 0.08	0.07 - 0.1		
aluminium	L / d = 2.5	good	250 - 400	0.05 - 0.08	0.07 - 0.1		DK100
	L / d = 4	normal	200 - 350	0.05 - 0.08	0.07 - 0.1		
Hardened steel	L / d = 2.5	good	60 - 100	0.05 - 0.08	0.07 - 0.1		D20CBN
	L / d = 4	normal	60 - 100	0.05 - 0.08	0.07 - 0.1		

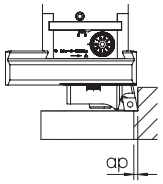

WINTOOL

It allows to be graphically constructed in a short period of time, showing the complete composition of the Modulhard'Andrea tools, including dimensions, weight and the list of components.

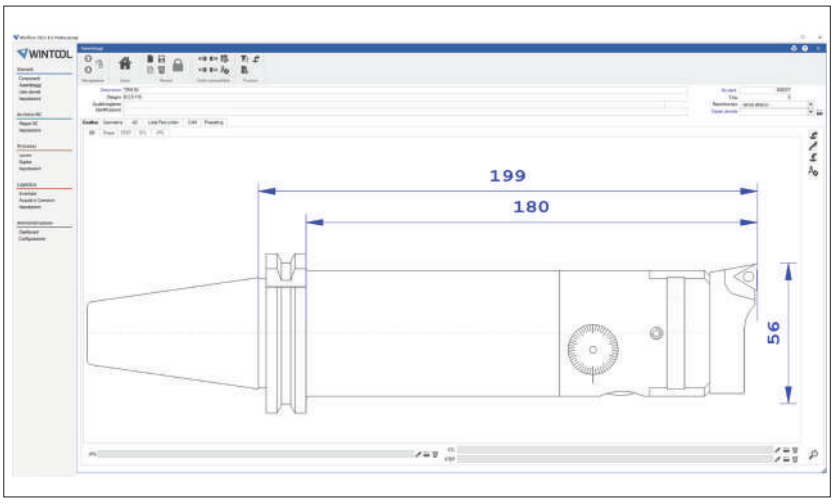

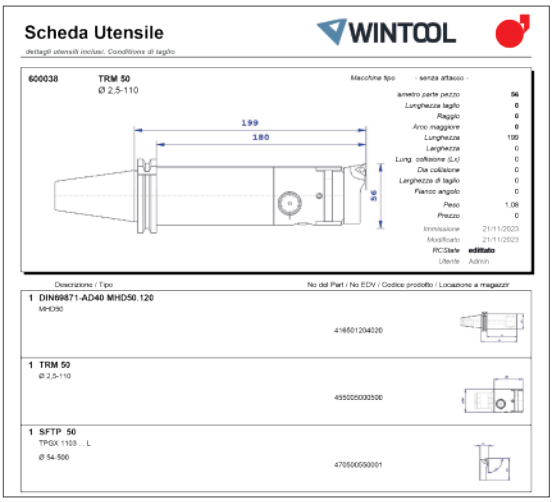

HSK-A

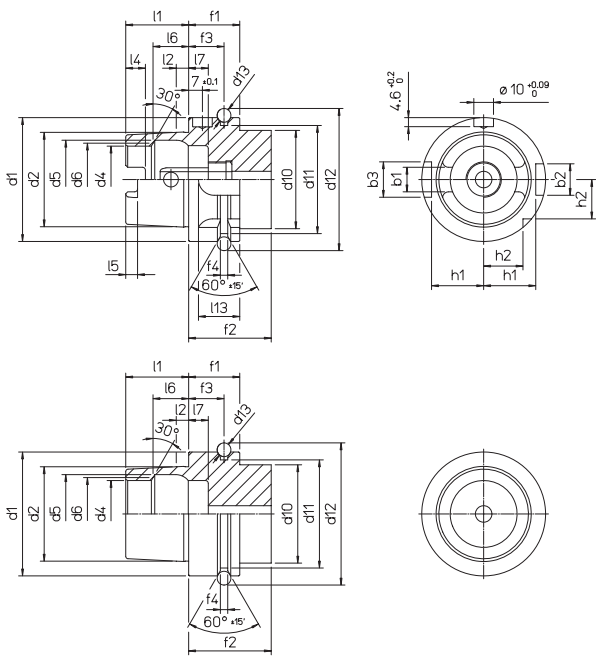

HSK	32	40	50	63	80	100
b1 $^{+0.04}_{-0.04}$	7.05	8.05	10.54	12.54	16.04	20.02
b2 H10	7	9	12	16	18	20
b3 H10	9	11	14	18	20	22
d1 h10	32	40	50	63	80	100
d2	24.007	30.007	38.009	48.010	60.012	75.013
d4 H10	17	21	26	34	42	53
d5 H11	20.5	25.5	32	40	50	63
d6	19	23	29	37	46	58
d10 max.	26	34	42	53	68	88
d11 $^{0}_{-0.1}$	26.5	34.8	43	55	70	92
d12 $^{0}_{-0.1}$	37	45	59.3	72.3	88.8	109.75
d13	4		7			
f1 $^{0}_{-0.1}$	20		26			29
f2 min.	35		42			45
f3 ± 0.1	16		18			20
f4 $^{+0.15}_{0}$	2		3.75			
h1 $^{0}_{-0.2}$	13	17	21	26.5	34	44
h2 $^{0}_{-0.3}$	9.5	12	15.5	20	25	31.5
l1 $^{0}_{-0.2}$	16	20	25	32	40	50
l2	3.2	4	5	6.3	8	10
l4 $^{+0.2}_{0}$	5	6	7.5	10	12	15
l5 $^{+0.2}_{0}$	3	3.5	4.5	6	8	10
l6 JS10	8.92	11.42	14.13	18.13	22.85	28.56
l7 $^{0}_{-0.1}$	8		10	10	12.5	12.5
l13	12		19	21	22	24

DIN 69871 A (ISO 7388-1)

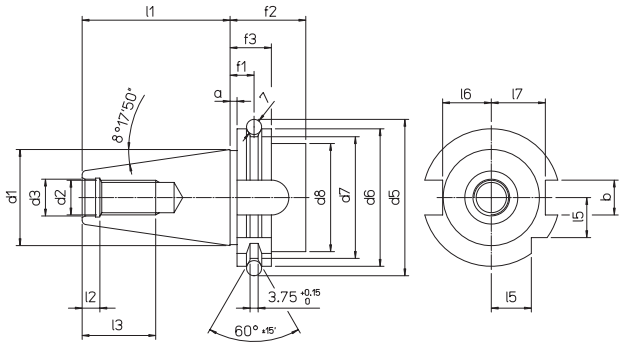

ISO	30	40	45	50	60
a ± 0.1	3.2				
b +0.5 / 0	16.1		19.3	25.7	
d1	31.75	44.45	57.15	69.85	107,95
d2 6H	M12	M16	M20	M24	M30
d3 H7	13	17	21	25	32
d5 ± 0.05	59.3	72.3	91.35	107.25	164,75
d6 0 / -0.1	50	63.55	82.55	97.50	155
d7 0 / -0.5	44.3	56.25	75.25	91.25	147,70
d8 max.	45	50	63	80	130
f1 ± 0.1	11.1				
f2 min.	35				38
f3 0 / -0.1	19.1				
l1 0 / -0.3	47.8	68.4	82.7	101.75	161,90
l2 +0.5 / 0	5.5	8.2	10	11.5	14
l3 min.	24	32	40	47	59
l5 0 / -0.3	15	18.5	24	30	49
l6 0 / -0.3	16.4	22.8	29.1	35.5	54,5
l7 0 / -0.3	19	25	31.3	37.7	59,3

MAS 403 BT A

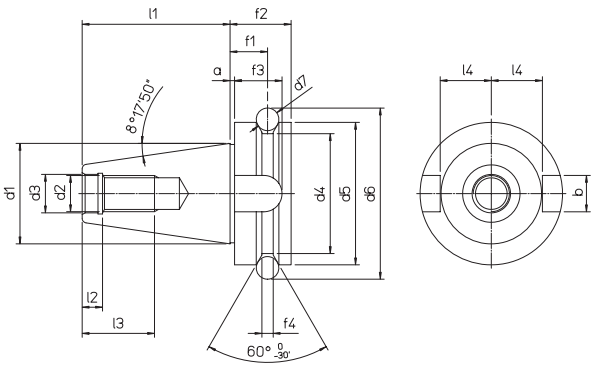

ISO	30	35	40	45	50	60
a ± 0.4	2			3		
b +0.2 / 0	16.1			19.3	25.7	25,7
d1	31.75	38.10	44.45	57.15	69.85	107,95
d2 6H	M 12		M 16	M 20	M 24	M30
d3 H8	12.5		17	21	25	31
d4 0 / -0.5	38	43	53	73	85	135
d5 h8	46	53	63	85	100	155
d6 ± 0.05	56.03	65.68	75.56	100.09	118.89	180.22
d7	8	10		12	15	20
f1 ± 0.1	13.6	14.6	16.6	21.2	23.2	28,2
f2	22	24	27	33	38	48
f3 min.	17	20	21	26	31	34
f4	4	5		6	7	11
l1 ± 0.2	48.4	56.4	65.4	82.8	101.8	161,8
l2 +0.5 / 0	7		9	11	13	16
l3 min.	24		30	36	45	56
l4 0 / -0.3	16.3	19.6	22.6	29.1	35.4	60,1

ANSI/CAT

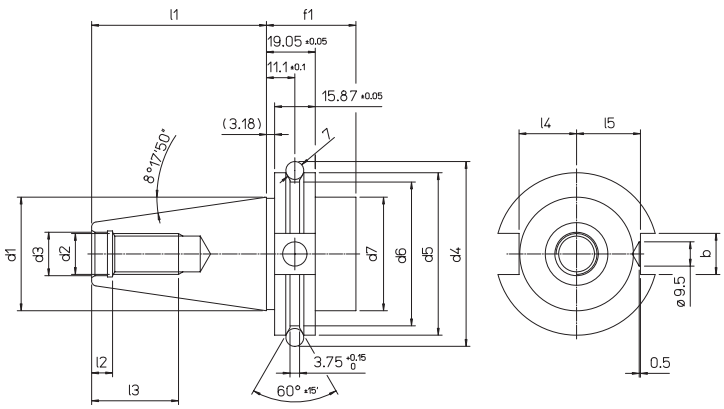

ISO	40	45	50
b +0.2 / 0	16.1	19.3	25.7
d1 6H	44.45	57.15	69.85
d2	M 16	M 20	M 24
d3 H7	17	21	25
d4 ±0.05	72.3	91.35	108.25
d5 0 / -0.1	63.55	82.55	98.5
d6 0 / -0.5	56.25	75.25	91.25
d7 ±0.15	44.45	57.15	69.95
f1 min	35		38
l1 0 / -0.3	68.4	82.7	101.75
l2 +0.5 / 0	8.2	10	11.5
l3 min.	32	40	47
l4 0 / -0.3	22.8	29.10	35.50
l5 0 / -0.3	25	31.3	37.7

DIN 2080

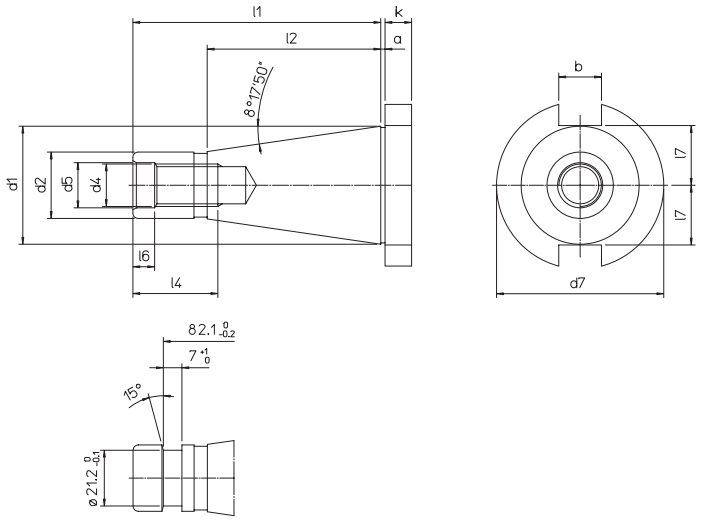

ISO 40 OTT

ISO	30	40	45	50
a ±0.2	1.6		3.2	
b H12	16.1		19.3	25.7
d1	31.75	44.45	57.15	69.85
d2 a10	17.4	25.3	32.4	39.6
d4 ±0.05	M 12	M 16	M 20	M 24
d5	13	17	21	26
d7 0 / -0.4	50	63	80	97.5
k ±0.15	8	10	12	12
l1	68.4	93.4	106.8	126.8
l2	48.4	65.4	82.8	101.8
l4	24	32	40	47
l6 +0.5/ 0	5.5	8.2	10	11.5
l7 max.	16.2	22.5	29	35.3

ISO 26623-1

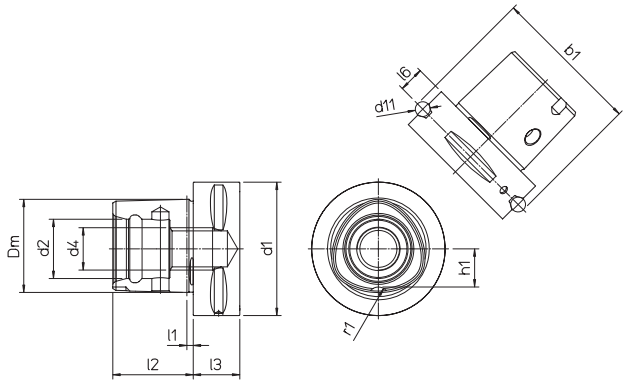

PSC	40	50	63	80
b1 ±0.1	46	59.3	70.7	86
Dm	28	35	44	55
d1 ±0.1	40	50	63	80
d2 +0.1 -0.05	18	21	28	32
d4	M14x1.5	M16x1.5	M20x2	
d11	5	7		
l1	2.5	3		
l2 ±0.1	24	30	38	48
l3 min	20		22	30
l6 ±0.15	8	10	12	
h1 ±0.1	11	14	18	22.2
r1 ±0.3	4	5	6	7

ISO 26623-2

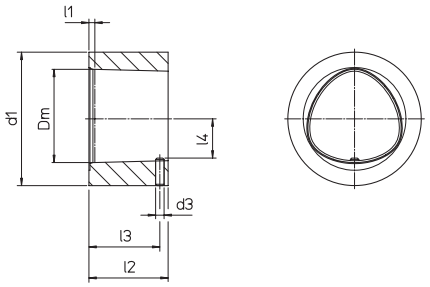

PSC	40	50	63	80
Dm	28	35	44	55
d1 min	40	50	63	80
d3	2.5	3	4	5
l1	2.3	2.8	2.8	2.8
l2 ±0.1	23.4	29.4	37.4	47.4
l3 ±0.2	21	26	33.5	43
l4	11.5±0.2	14.5±0.2	18.5±0.2	22.8±0.2

MONOforce high precision ultra-tight toolholders are suitable for rough milling and precision finishing operations.
Produced in accordance with the most widespread standards of machine spindles, by using RC reduction collets, it allows a range of use from Ø 3mm to Ø 25mm,

MAX.	RPM 15.000

MAX.	40 BAR

5 µm

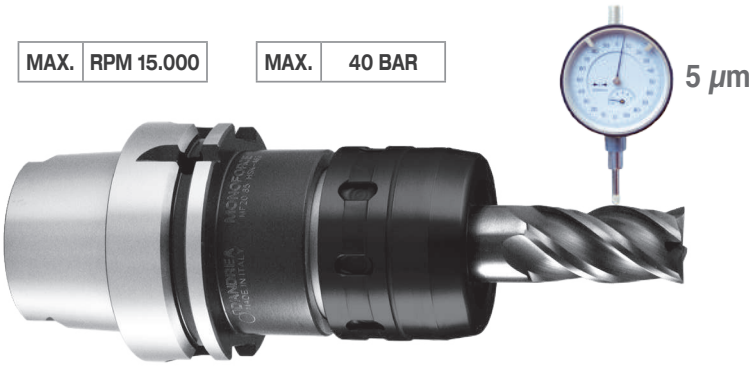

DIN 69871 AD

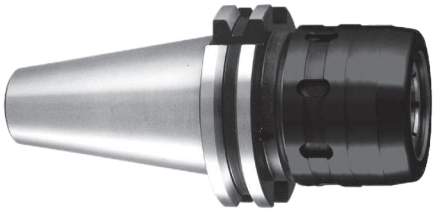

pic.1

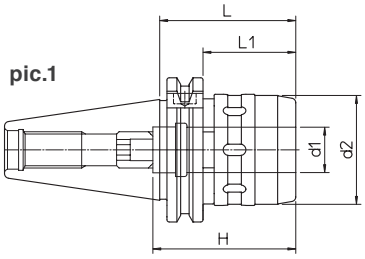

pic.2

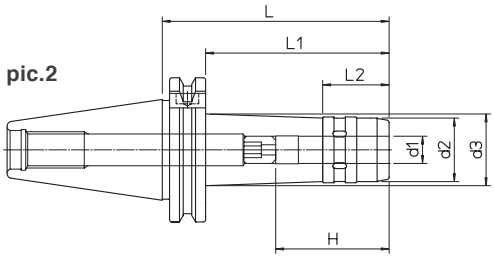

Without clamping wrench - Chip prearrangement

DIN	REF.	CODE	d1	d2	d3	H	L	L1	L2	kg	pic.
40	**DIN69871-AD40 MF12.100**	71DIN-A40MF1210	12	28	32	46	100	81	29.5	1.2	**2**
40	**DIN69871-AD40 MF20.60**	71DIN-A40MF2006	20	48		63	60	41		1.1	**1**
40	**DIN69871-AD40 MF32.95**	71DIN-A40MF3209	32	66		80	95			1.6	**1**
50	**DIN69871-AD50 MF20.80**	71DIN-A50MF2008	20	48		63	80	61		2.3	**1**
50	**DIN69871-AD50 MF32.75**	71DIN-A50MF3207	32	66		90	75	56		2.8	**1**

MAS 403 BT AD

pic.1

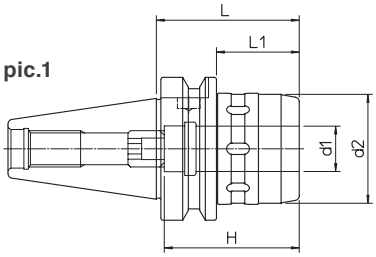

pic.2

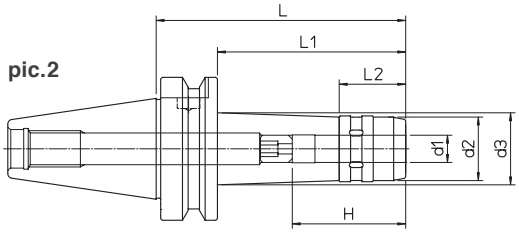

Without clamping wrench - Chip prearrangement

BT	REF.	CODE	d1	d2	d3	H	L	L1	L2	kg	pic.
40	**MAS403 BT40-AD MF12.100**	71MBT-A40MF1210	12	28	32	46	100	73	29.5	1.4	**2**
40	**MAS403 BT40-AD MF20.65**	71MBT-A40MF2007	20	48		63	65	38		1.3	**1**
40	**MAS403 BT40-AD MF32.90**	71MBT-A40MF3209	32	66		80	90			2.1	**1**
50	**MAS403 BT50-AD MF20.85**	71MBT-A50MF2008	20	48		63	85	47		3.7	**1**
50	**MAS403 BT50-AD MF32.95**	71MBT-A50MF3209	32	66		90	95	57		4.4	**1**

MAS 403 BT AD FACE CONTACT

pic.1

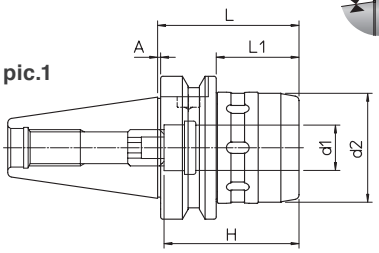

pic.2

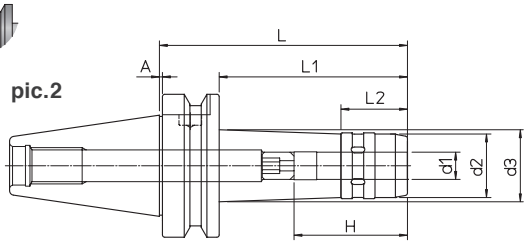

Without clamping wrench - Chip prearrangement

BT	REF.	CODE	d1	d2	d3	H	A	L	L1	L2	kg	pic.
40	**MAS403 BT40-AD FC MF12.100**	71MBF-A40MF1210	12	28	32	46	1	100	73	29.5	1.4	**2**
40	**MAS403 BT40-AD FC MF20.65**	71MBF-A40MF2007	20	48		63	1	65	38		1.3	**1**
40	**MAS403 BT40-AD FC MF32.90**	71MBF-A40MF3209	32	66		80	1	90			2.1	**1**
50	**MAS403 BT50-AD FC MF20.85**	71MBF-A50MF2008	20	48		63	1.5	85	47		3.7	**1**
50	**MAS403 BT50-AD FC MF32.95**	71MBF-A50MF3209	32	66		90	1.5	95	57		4.4	**1**

DIN 69893 HSK-A

fig.1

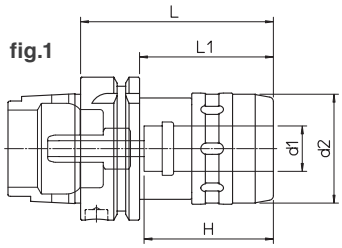

fig.2

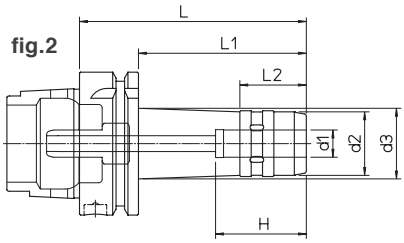

Supplied with coolant tube - Without clamping wrench - Chip prearrangement

HSK-A	REF.	CODE	d1	d2	d3	H	L	L1	L2	kg	fig.
63	**HSK-A63 MF12.100**	71HSK-A63MF1210	12	28	32	46	100	74	29.5	1.1	**2**
63	**HSK-A63 MF20.85**	71HSK-A63MF2008	20	48		60	85	59		1.2	**1**
63	**HSK-A63 MF32.105**	71HSK-A63MF3210	32	66		80	105			2	**1**
100	**HSK-A100 MF20.95**	71HSKA100MF2009	20	48		60	95	66		2.8	**1**
100	**HSK-A100 MF32.110**	71HSKA100MF3211	32	66		80	110	81		3.1	**1**

PSC - FORCE see p.32

KIT K01
MONOforce 20

1 RC 20.06
1 RC 20.08
1 RC 20.10
1 RC 20.12
1 RC 20.16
1 CHV 50

DIN	REF.	CODE	kg
40	**KIT K01 MONOFORCE 20.60 DIN40AD**	7KDIN-A40MF2006	2
40	**KIT K01 MONOFORCE 32.95 DIN40AD**	7KDIN-A40MF3209	4.4
50	**KIT K01 MONOFORCE 20.80 DIN50AD**	7KDIN-A50MF2008	4.6
50	**KIT K01 MONOFORCE 32.75 DIN50AD**	7KDIN-A50MF3207	6.2

KIT K01
MONOforce 32

1 RC 32.06
1 RC 32.08
1 RC 32.10
1 RC 32.12
1 RC 32.16
1 RC 32.20
1 RC 32.25
1 CHV 75

BT	REF.	CODE	kg
40	**KIT K01 MONOFORCE 20.65 BT40AD**	7KMBT-A40MF2007	2.3
40	**KIT K01 MONOFORCE 32.90 BT40AD**	7KMBT-A40MF3209	4.6
50	**KIT K01 MONOFORCE 20.85 BT50AD**	7KMBT-A50MF2008	5.4
50	**KIT K01 MONOFORCE 32.95 BT50AD**	7KMBT-A50MF3209	7.5

HSK-A	REF.	CODE	kg
63	**KIT K01 MONOFORCE 20.85 HSK63**	7KHSK-A63MF2008	2.3
63	**KIT K01 MONOFORCE 32.105 HSK63**	7KHSK-A63MF3210	4.5
100	**KIT K01 MONOFORCE 32.110 HSK100**	7KHSKA100MF3211	6.7

ON REQUEST **KIT K01** FACE CONTACT

RC BUSHES ULTRA-TIGHT SPINDLE

0.003

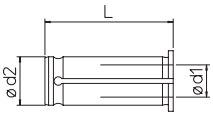

RC SEALED bushes on request

ød2	REF.	CODE	d1	L
12	**RC12.03**	497080012030	3	44
12	**RC12.04**	497080012040	4	44
12	**RC12.06**	497080012060	6	44
12	**RC12.08**	497080012080	8	44
12	**RC12.10**	497080012100	10	44

ød2	REF.	CODE	d1	L
20	**RC20.03**	497080020030	3	50
20	**RC20.04**	497080020040	4	50
20	**RC20.05**	497080020050	5	50
20	**RC20.06**	497080020060	6	50
20	**RC20.08**	497080020080	8	50
20	**RC20.10**	497080020100	10	50
20	**RC20.12**	497080020120	12	50
20	**RC20.14**	497080020140	14	50
20	**RC20.16**	497080020160	16	50

ød2	REF.	CODE	d1	L
32	**RC32.03**	497080032030	3	63
32	**RC32.04**	497080032040	4	63
32	**RC32.05**	497080032050	5	63
32	**RC32.06**	497080032060	6	63
32	**RC32.08**	497080032080	8	63
32	**RC32.10**	497080032100	10	63
32	**RC32.12**	497080032120	12	63
32	**RC32.14**	497080032140	14	63
32	**RC32.16**	497080032160	16	63
32	**RC32.18**	497080032180	18	63
32	**RC32.20**	497080032200	20	63
32	**RC32.25**	497080032250	25	63

PR CT R SHRINK FIT EXTENSIONS WITH AXIAL ADJUSTMENT

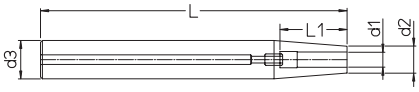

Supplied with the axial setting screw

REF.	CODE	d1	d2	d3	L	L1	kg
PR.CT.R D20.06.130	49DC21320060	6	14	20	130	22 / 36	0.20
PR.CT.R D20.06.160	49DC21620060	6	14	20	160	22 / 32	0.33
PR.CT.R D20.08.130	49DC21320080	8	14	20	130	22 / 36	0.25
PR.CT.R D32.16.160	49DC21632160	16	27	32	160	39 / 49	0.78
PR.CT.R D32.16.200	49DC22032160	16	27	32	200	39 / 49	1.81
PR.CT.R D32.18.160	49DC21632180	18	27	32	160	39 / 49	0.77
PR.CT.R D32.20.160	49DC21632200	20	27	32	160	41 / 51	0.67
PR.CT.R D32.20.200	49DC22032200	20	27	32	200	41 / 51	0.87

MONOd' monolithic collet chuck holders are manufactured according to ISO Standards in DIN 69871, MAS 403 BT and DIN 69893 HSK machine tools.
High quality production guarantees a high level of precision. All ER toolholders are balanced to class G 6.3 at 15,000 rpm.

↗	0.003
MAX.	RPM 15.000

DIN 69871 AD COLLET CHUCK HOLDER - ER DIN 6499

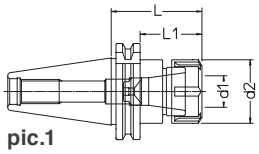

pic.1

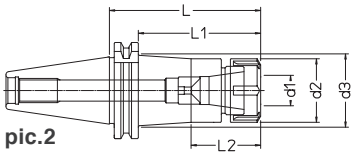

pic.2

Supplied without collets and clamping wrenches

DIN	REF.	CODE	ER	d1	d2	d3	L	L1	L2	kg	pic.
40	DIN69871-AD40 ER16.60	71DIN-A40ER1606	16M	0.5-10	22		60	41		0.9	1
40	DIN69871-AD40 ER16.100	71DIN-A40ER1610	16M	0.5-10	22	29.5	100	81	41	1	2
40	DIN69871-AD40 ER25.60	71DIN-A40ER2506	25	1-16	42		60	41		1.1	1
40	DIN69871-AD40 ER25.100	71DIN-A40ER2510	25	1-16	42	47	100	81	46	1.6	2
40	DIN69871-AD40 ER32.70	71DIN-A40ER3207	32	2-20	50		70	51		1.2	1
40	DIN69871-AD40 ER32.110	71DIN-A40ER3211	32	2-20	50		110	91		1.7	1
50	DIN69871-AD50 ER16.100	71DIN-A50ER1610	16M	0.5-10	22	29.5	100	81	41	2.5	2
50	DIN69871-AD50 ER16.160	71DIN-A50ER1616	16M	0.5-10	22	32.5	160	141	41	3.3	2
50	DIN69871-AD50 ER25.110	71DIN-A50ER2511	25	1-16	42	48	110	91	46	2.8	2
50	DIN69871-AD50 ER25.160	71DIN-A50ER2516	25	1-16	42	50	160	141	46	3.6	2
50	DIN69871-AD50 ER32.70	71DIN-A50ER3207	32	2-20	50		70	51		2.9	1
50	DIN69871-AD50 ER32.160	71DIN-A50ER3216	32	2-20	50	57.5	160	141	52	4	2

MAS 403 BT AD COLLET CHUCK HOLDER - ER DIN 6499

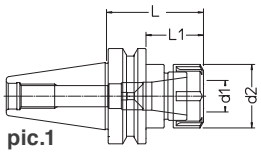

pic.1

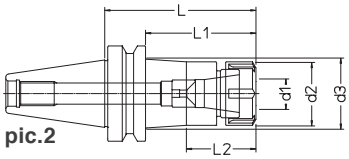

pic.2

Supplied without collets and clamping wrenches

BT	REF.	CODE	ER	d1	d2	d3	L	L1	L2	kg	pic.
40	MAS403 BT40-AD ER16.60	71MBT-A40ER1606	16M	0.5-10	22		60	33		1	1
40	MAS403 BT40-AD ER16.100	71MBT-A40ER1610	16M	0.5-10	22	28	100	73	41	1.1	2
40	MAS403 BT40-AD ER25.65	71MBT-A40ER2506	25	1-16	42		65	38		1.2	1
40	MAS403 BT40-AD ER25.100	71MBT-A40ER2510	25	1-16	42	45.5	100	73	46	1.7	2
40	MAS403 BT40-AD ER32.70	71MBT-A40ER3207	32	2-20	50		70	43		1.3	1
40	MAS403 BT40-AD ER32.110	71MBT-A40ER3211	32	2-20	50		110	83		1.8	1
50	MAS403 BT50-AD ER16.100	71MBT-A50ER1610	16M	0.5-10	22	26.5	100	62	41	3.6	2
50	MAS403 BT50-AD ER16.160	71MBT-A50ER1616	16M	0.5-10	22	31	160	122	41	4.3	2
50	MAS403 BT50-AD ER25.110	71MBT-A50ER2511	25	1-16	42	45.5	110	72	46	3.8	2
50	MAS403 BT50-AD ER25.160	71MBT-A50ER2516	25	1-16	42	48.5	160	122	46	4.6	2
50	MAS403 BT50-AD ER32.80	71MBT-A50ER3208	32	2-20	50		80	42		3.9	1
50	MAS403 BT50-AD ER32.160	71MBT-A50ER3216	32	2-20	50	56	160	122	52	5	2

DIN 69893 HSK-A COLLET CHUCK HOLDER - ER DIN 6499

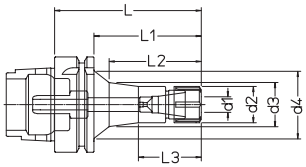

Supplied with coolant tube

HSK-A	REF.	CODE	ER	d1	d2	d3	d4	L	L1	L2	L3	kg
63	HSK-A63 ER16.80	71HSKA063ER1608	16M	0.5-10	22	32		80	54	41		1.1
63	HSK-A63 ER16.120	71HSKA063ER1612	16M	0.5-10	22	31		120	94			1.9
63	HSK-A63 ER25.80	71HSKA063ER2508	25	1-16	42			80	54			1.3
63	HSK-A63 ER25.140	71HSKA063ER2514	25	1-16	42	47.5		140	114	46		1.7
63	HSK-A63 ER32.90	71HSKA063ER3209	32	2-20	50			90	64			1.6
63	HSK-A63 ER32.160	71HSKA063ER3216	32	2-20	50			160	134			2.2
100	HSK-A100 ER16.100	71HSKA100ER1610	16M	0.5-10	22	25	45	100	71	61	41.5	2.3
100	HSK-A100 ER16.160	71HSKA100ER1616	16M	0.5-10	22	34.5	44	160	131	126		2.5
100	HSK-A100 ER25.100	71HSKA100ER2510	25	1-16	42	45.5		100	71	47		2.6
100	HSK-A100 ER25.160	71HSKA100ER2516	25	1-16	42	49.5		160	131	47		3.2
100	HSK-A100 ER32.120	71HSKA100ER3212	32	2-20	50	55		120	91	52		3.1
100	HSK-A100 ER32.160	71HSKA100ER3216	32	2-20	50	56.5		160	131	52		3.7

PSC - PE see p.32

ER DIN 6499-B

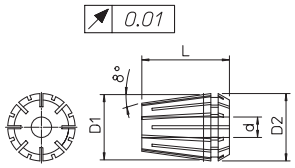

REF.	d	D1	D2	L
ER 16	0.5 ~ 10	16	17	27.5
ER 25	1 ~ 16	25	26	34
ER 32	2 ~ 20	32	33	40

RANGE	CODE ER16			CODE ER25			CODE ER32		
1 - 0.5	496080116010								
1.5 - 1	496080116015								
2 - 1				496080125020					
2 - 1.5	496080116021								
2.5 - 2	496080116025								
3 - 2	496080116030			496080125030			496080132030		
4 - 3	496080116040			496080125040			496080132040		
5 - 4	496080116050			496080125050			496080132050		
6 - 5	496080116060			496080125060			496080132060		
7 - 6	496080116070			496080125070			496080132070		
8 - 7	496080116080			496080125080			496080132080		
9 - 8	496080116090			496080125090			496080132090		
10 - 9	496080116100			496080125100			496080132100		
11 - 10				496080125110			496080132110		
12 - 11				496080125120			496080132120		
13 - 12				496080125130			496080132130		
14 - 13				496080125140			496080132140		
15 - 14				496080125150			496080132150		
16 - 15				496080125160			496080132160		
17 - 16							496080132170		
18 - 17							496080132180		
19 - 18							496080132190		
20 - 19							496080132200		
ER collets SEALED on request									

SET ER

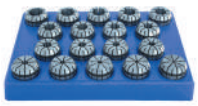

REF.	Ø	CODE
SET ER16/10	0.5 ~ 10	496080116000
SET ER25/15	1 ~ 16	496080125000
SET ER32/18	2 ~ 20	496080132000

ISO 7388/2 A - DIN 69872

pic. 1

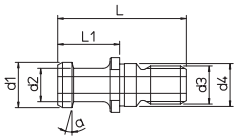

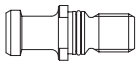

pic. 2

REF.	CODE	ISO	d1	d2	d3	d4	L	L1	a	pic.
TNT ISO7388/2A 40	201430250401	40	19	14	M16	17	54	26	15°	1
TNT ISO7388/2A 50	201430250501	50	28	21	M24	25	74	34	15°	1
TNT ISO7388/2A 40 WH	201430250400	40	19	14	M16	17	54	26	15°	2
TNT ISO7388/2A 50 WH	201430250500	50	28	21	M24	25	74	34	15°	2

ISO 7388/2 B - ANSI B.5 50

pic. 1

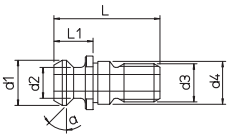

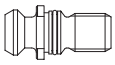

pic. 2

REF.	CODE	ISO	d1	d2	d3	d4	L	L1	a	pic.
TNT ISO7388/2B 40	201430251401	40	18.95	12.95	M16	17	44.50	16.40	45°	1
TNT ISO7388/2B 50	201430251501	50	29.10	19.60	M24	25	65.50	25.55	45°	1
TNT ISO7388/2B 40 WH	201430251400	40	18.95	12.95	M16	17	44.50	16.40	45°	2
TNT ISO7388/2B 50 WH	201430251500	50	29.10	19.60	M24	25	65.50	25.55	45°	2

MAS 403 BT - 30° - 45°

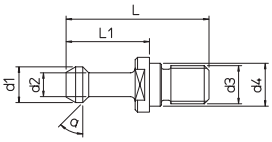

REF.	CODE	ISO	d1	d2	d3	d4	L	L1	a
TNT MAS403 BT30 30°	201430252301	30	11	7	M12	12.5	43	23	30°
TNT MAS403 BT40 30°	201430252401	40	15	10	M16	17	60	35	30°
TNT MAS403 BT50 30°	201430252501	50	23	17	M24	25	85	45	30°
TNT MAS403 BT30 45°	201430252302	30	11	7	M12	12.5	43	23	45°
TNT MAS403 BT40 45°	201430252402	40	15	10	M16	17	60	35	45°
TNT MAS403 BT50 45°	201430252502	50	23	17	M24	25	85	45	45°

SISTEM MHD'

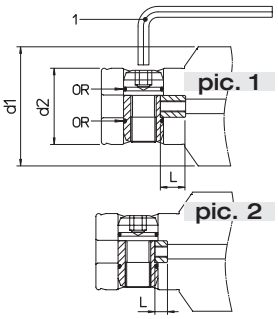

REF.	CODE		d1	d2	CODE 1		CODE OR		L	pic.
MHD' 16	381725001161		16	10	101500100250				2	2
MHD' 20	381725001201		20	13	101500100300				2.5	2
MHD' 25	381725001251		25	16	101500100300				3	2
MHD' 32	381725001321		32	20	101500100400		101254007510		3.55	2
MHD' 40	381725001401		40	25	101500100500		101254010010		4	2
MHD' 50 RD 50 / .. TRM - TRC - TR-E	381725001501		50	32	101500100600		101254013010		4.2	2
MHD' 50	381725001001		50	32	101500100600		101254013010		12.2	1
MHD' 63-80 RD 63 / .. TRM - TRC	381725001502		63-80	42	101500100800		101251002075		4.9	2
MHD' 63-80	381725001002		63-80	42	101500100800		101251002075		13.85	1

MHD' - PSC / TRM

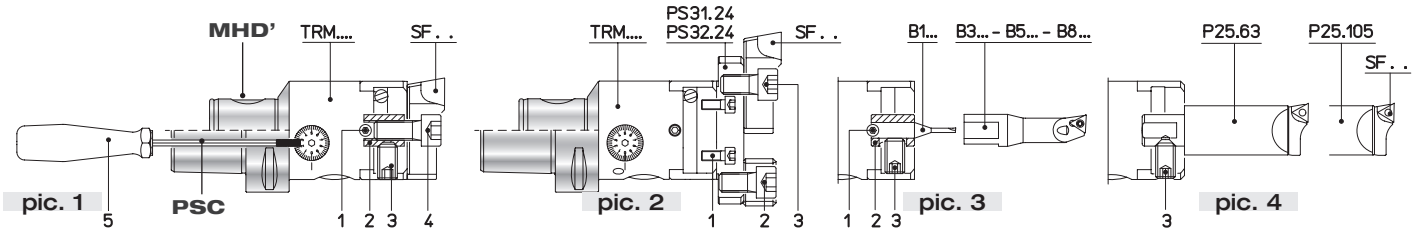

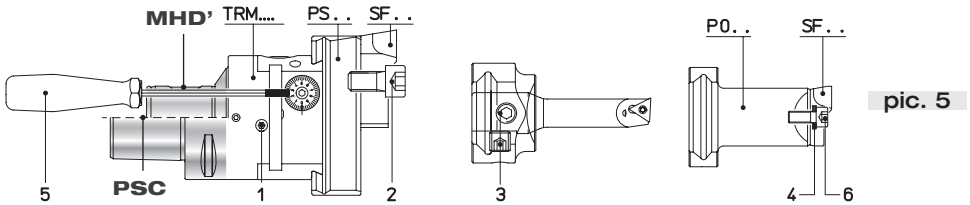

REF.	CODE 1		CODE 2		CODE 3		CODE 4		CODE 5		CODE 6		pic.
TRM 16 MHD'	200100190301						100051030006		101500800150				1
TRM 20 MHD'	200100190301						100051040008		101500800150				1
TRM 25 MHD'	100271040004						100051050010		101500800200				1
TRM 32 MHD'	100271040006						100051060012		101500800200				1
TRM 40 MHD'	100271050005						100051080014		101500800250				1
TRM 50 MHD' PSC50-TRM50 PSC63-TRM50	100271050008		201041015002		100231100016		100051100025		101500800250				1
TRM 50 MHD' PSC50-TRM50 PSC63-TRM50	200100150501		100051100020		100051100020				101500800250				2
TRM 50 MHD' PSC50-TRM50 PSC63-TRM50	100271050008		200560116082		100231100016				101500800250				3-4
TRM 63 MHD' PSC63-TRM63	100251060010		100051100018		100251080008		100051050012		101500800300		100800100530		5
TRM 80-MHD' PSC63-TRM80	100251060014		100051100018		100251080008		100051050012		101500800300		100800100530		5
TRM 125 MHD'	100251060020		100051100025				100051060018		101500800300		100800100640		5

TRE 50

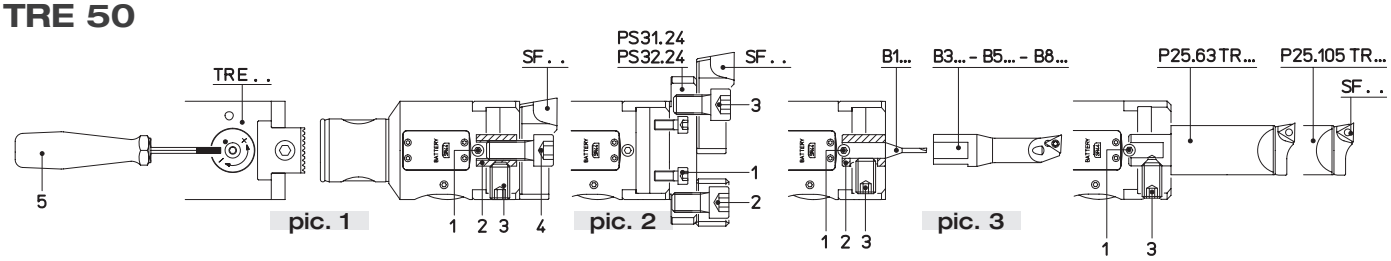

REF.	CODE 1		CODE 2		CODE 3		CODE 4		CODE 5		pic.
TRE 50	100238060010		201041015002		100231100016		100051100025		101500800250		1
TRE 50	200100150501		100051100020		100051100020						2
TRE 50	100238060010		200560116082		100231100016						3

TRC

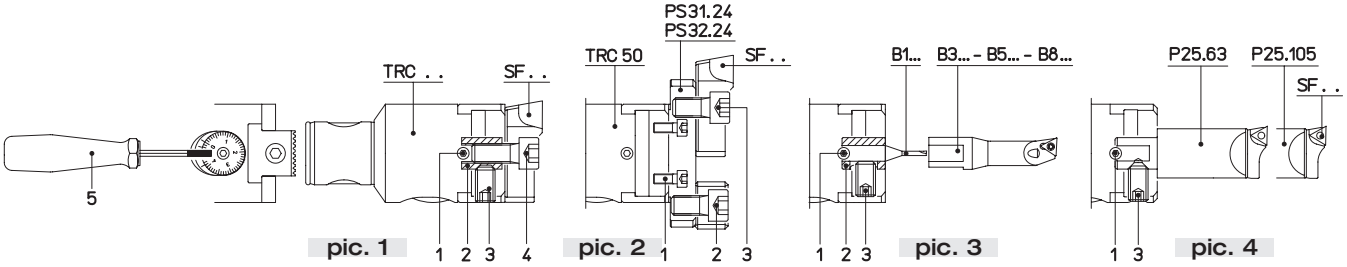

REF.	CODE 1		CODE 2		CODE 3		CODE 4		CODE 5		pic.
TRC 16	200100190301						100051030006		101500800150		1
TRC 20	200100190301						100051040008		101500800150		1
TRC 25	100271040004						100051050010		101500800150		1
TRC 32	100271050005						100051060012		101500800250		1
TRC 40	100271060006						100051080014		101500800300		1
TRC 50	100271060008		201041015002		100231100016		100051100025		101500800300		1
TRC 50	200100150501		100051100020		100051100025						2
TRC 50	100271060008		200560116082		100231100010						3-4
TRC 63	100271060008						100051100020		101500800300		1
TRC 80	100271060012						100051100025		101500800300		1

MHD' - PSC / TS

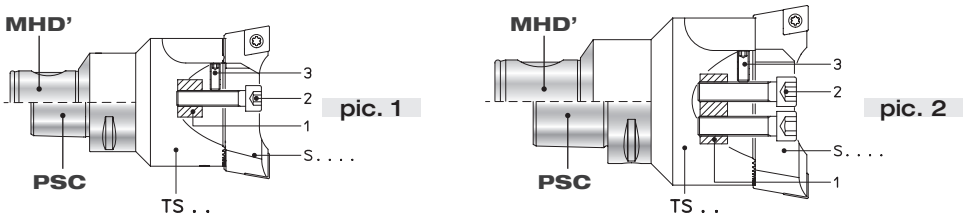

REF.	CODE 1		CODE 2		CODE 3	€	pic.
TS 16/16 MHD'	201430110008		100051030014		100231030004		1
TS 20/20 MHD'	201430110009		100051040015		100231030005		1
TS 25/25 MHD'	201430110032		100051040020		100231030008		1
TS 32/32 MHD'	201430110031		100051050025		100231040012		1
TS 40/40 MHD'	201430110029		100051060030		100231050014		1
TS 50/50 MHD' - PSC50-TS50 / PSC63-TS50	201430110013		100051080035		100231050012		1-2
TS 50/63 MHD'	201430110030		100051100040		100231060016		2
TS 63/63 MHD' - PSC63-TS63	201430110030		100051100040		100231060016		1-2
TS 80/80 MHD' - PSC63-TS80	201430110015		100051120045		100231080025		1-2
TS 80/90 MHD'	201430110015		100051120045		100231080025		1-2

BHT 250 - 500 - 750

ROUGHING BHT 250 - 500 - 750 SG

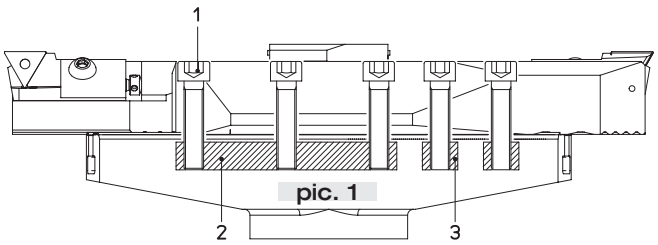

FINISHING BHT 250 - 500 - 750 FN

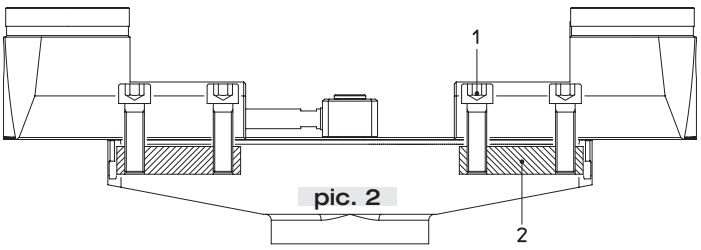

	REF.	CODE 1		CODE 2		CODE 3	
SGROSSATURA pic. 1	BHT 250 - 500 - 750 SG	100051100045		201430100065		201430100066	
FINITURA pic.2	BHT 250 - 500 - 750 FN	100051100035		201430100067			

SPARE PARTS

PE - MHD' ER DIN 6499

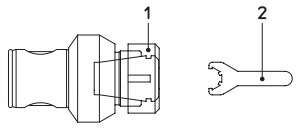

REF.	CODE 1	CODE 2
PE 20 / ER16M	100451011600	101501001600
PE 32 / ER25M	100451012500	101501002500
PE 40 / ER25	100451032500	101501002501
PE 50 / ER25	100451032500	101501002501
PE 50 / ER32	100451033200	101501003201
PE 63 / ER32	100451033200	101501003201

PE - PSC / MONOd ER DIN 6499

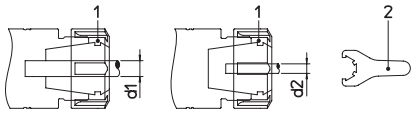

REF.	CODE 1	d1	CODE 2	d2
ER 16 M	100451011600	5 ~ 10	101501001600	1 ~ 4
ER 25	100451032500	8 ~ 16	101501002501	2 ~ 7
ER 32	100451033200	8 ~ 20	101501003201	3 ~ 7

AW DIN 1835 B-E

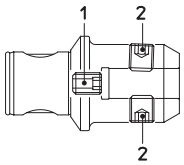

REF.	CODE 1	CODE 2
AW 50/6	200100190808	200100190610
AW 50/8	200100190808	200100190810
AW 50/10	200100190809	200100191012
AW 50/12	200100190809	200100191216
AW 50/14	200100190809	200100191216
AW 50/16	200100191215	200100191416
AW 50/20	200100191215	200100191616

REF.	CODE 1	CODE 2
AW 50/25	200100191615	200100191820
AW 63/16	200100191215	200100191416
AW 63/20	200100191215	200100191616
AW 63/25	200100191615	200100191820
AW 63/32	200100191615	200100192020
AW 80/40	200100192019	200100192020

PF MHD' - PSC

MHD'

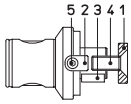

PSC

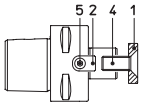

REF.	CODE 1	CODE 2	CODE 3	CODE 4	CODE 5
PF 40/16	201010085010	201101800801	101001040014	100101080025	100051030008
PF 40/22	201010105030	201101801002	101001060016	100101100025	100051040010
PF 50/16	201010085010	201101800801	101001040014	100101080025	100051030008
PF 50/22 MHD' / PSC50-PF22.25	201010105030	201101801002	101001060016	100101100025	100051040010
PF 50/27 MHD' / PSC50-PF27.25	201010125030	201101801202	101001070018	100101120030	100051050012
PF 50/32	201010165020	201101801402	101001080020	100101160035	100051060016
PF 63/22	201010105030	201101801002	101001060016	100101100025	100051040010
PF 63/27 MHD' / PSC63-PF27.25	201010125030	201101801202	101001070018	100101120030	100051050012
PF 63/32 MHD' / PSC63-PF32.25	201010165020	201101801402	101001080020	100101160035	100051060016
PF 80/32 MHD' / PSC80-PF32.30	201010165020	201101801402	101001080020	100101160035	100051060016
PF 80/40 MHD' / PSC80-PF40.45	201010210010	201101801603	101001100025	100101200045	100051060018
PF 80/50	201010260330	201101801802	101001120028	100101240050	100051060020
PF 80/60		201101802510	101001140036		100051120025

PSC

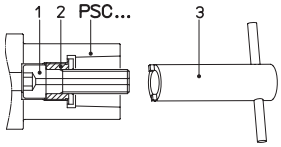

PSC	CODE 1	CODE 2	CODE 3
40	200101151448	201032215005	101501402101
50	200101151658	201032515005	101501402401
63	200101152071	201033015021	101501403001
80	200101152071	201033015021	101501403001

FORCE VCR SETTING SCREW FOR INTERNAL COOLANT SUPPLY

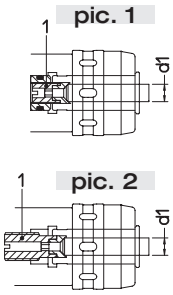

pic.	REF.	CODE 1	d1
1	VCR 20 MONOforce 20 HSK63-100 MHD'50 PSC 63-80	382041020032	3 ~ 5
		382041020062	6 ~ 12
		382041020142	14 ~ 20
1	VCR 32 MONOforce 32 HSK63-100 MHD'63 PSC 63-80	382041032033	3 ~ 5
		382041032063	6 ~ 12
		382041032143	14 ~ 20
		382041032253	25 ~ 32

pic.	REF.	CODE 1	d1
2	VCR 20 MONOforce 20 DIN/BT-40-50	382041020031	3 ~ 5
		382041020061	6 ~ 12
		382041020141	14 ~ 20
2	VCR 32 MONOforce 32 DIN/BT-40	382041032031	3 ~ 5
		382041032061	6 ~ 12
		382041032141	14 ~ 20
		382041032251	25 ~ 32
2	VCR 32 MONOforce 32 DIN/BT-50	382041032032	3 ~ 5
		382041032062	6 ~ 12
		382041032142	14 ~ 20
		382041032252	25 ~ 32

FORCE

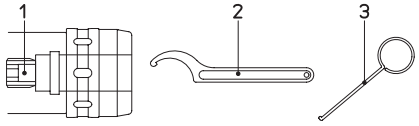

REF	CODE 1	CODE 2	CODE 3
FORCE 12	200100191014	101500400028	201271600400
FORCE 20	200100191615	101500400050	201271600400
FORCE 32	200100191615	101500400075	201271600400

FORCE GH - VT SEALING DEVICE FOR HIGH PRESSURE COOLANT SUPPLY

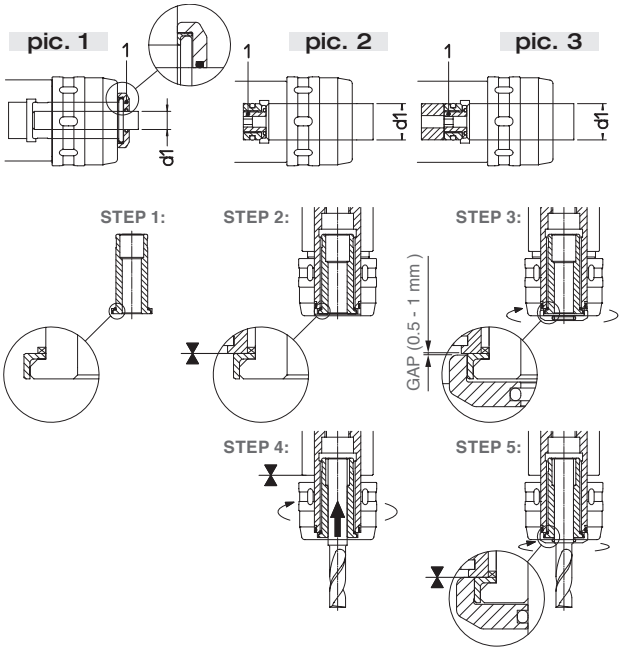

pic.	REF.	CODE 1	d1
1	GH 20 MONOforce 20 HSK63 MHD'50 / DIN/BT-40-50 PSC 63 - 80	382042020061	6
		382042020081	8
		382042020101	10
		382042020121	12
		382042020141	14
		382042020161	16
2	VT 20.20 MONOforce 20 DIN/BT-40-50 HSK63-100 PSC 63-80	382042020201	20
1	GH 32 MONOforce 32 DIN/BT-40-50 / HSK63-100 MHD'63 PSC 63-80	382042032061	6
		382042032081	8
		382042032101	10
		382042032121	12
		382042032141	14
		382042032161	16
		382042032181	18
		382042032201	20
		382042032251	25
2	VT 32.32 MONOforce 32 DIN/BT-40 HSK63-100 PSC 63-80	382042032321	32
3	VT 32.32.100 MONOforce 32 DIN/BT-50	382042032322	32

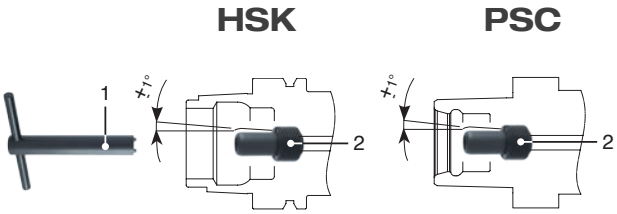

REF.	CODE 1	CODE 2
HSK-A50	101501101400	382019010001
HSK-A63	101501101600	382019012001
HSK-A80	101501101800	382019014001
HSK-A100	101501102200	382019016001
PSC 40	101501200700	382020006001
PSC 50	101501200800	382020007001
PSC 63	101501200900	382020008001
PSC 80	101501201100	382020010001

PSC - TU ISO 26623-1

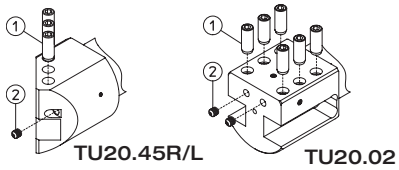

REF.	CODE 1	CODE 2
TCD' PSC 50 TU20.45R/L	100231120025	100585010800
TCD' PSC 63 TU25.45R/L	100231120025	100585010800
TCD' PSC 80 TU32.45R/L	100231120025	100585010800
TCD' PSC 50 TU20.02	100231120025	100585010800
TCD' PSC 63 TU25.02	100231120025	100585010800
TCD' PSC 80 TU32.02	100231120025	100585010800

PSC - D... ISO 26623-1

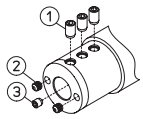

REF.	CODE 1	CODE 2	CODE 3
TCD' PSC 50 D.25x80	100231100016	100585010800	
TCD' PSC 63 D.25x80	100231100016	100585010800	
TCD' PSC 63 D.40x125	100231120020	100585010800	100231080008
TCD' PSC 80 D.25x85	100231100016	100585010800	
TCD' PSC 80 D.40x125	100231120020	100585010800	100231080008

PSC - TU ISO 26623-1

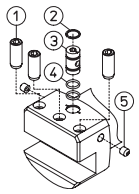

REF.	CODE 1	CODE 2	CODE 3	CODE 4	CODE 5
TCD' PSC 63 TU20.90	100231120025	100900301400	201462501400	101251002043	100580610180
TCD' PSC 63 TU25.90	100231120025	100900301400	201462501400	101251002043	100580610180
TCD' PSC 80 TU32.90	100231120025	100900301400	201462501400	101251002043	100580610180

SS.. 95

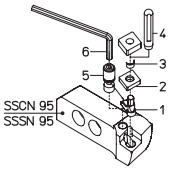

REF.	CODE 1	CODE 2	CODE 3	CODE 4	CODE 5	CODE 6
SSCN 95	491111190600	492031190600	100655095112	101501301408	494311190600	101500100400
SSSN 95	491111190600	492035190600	100655095112	101501301408	494311190600	101500100400

U-TRONIC

Medium and large Numerical Control heads, applicable on boring machines, machining centers and special machines. These offer the capabilities of different and additional machining operations, both internal and external. The slide movement is managed by an integrated servomotor and directly connected to the NC. The application on machines could be manual or automatic thanks to an interface flange.

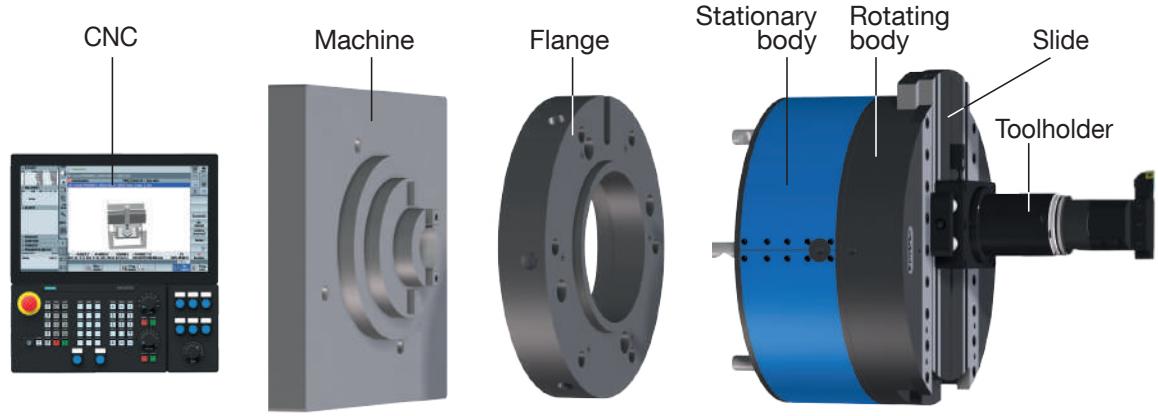

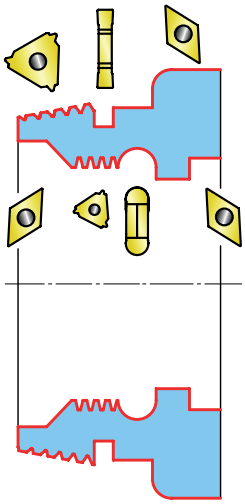

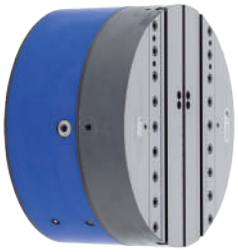

UT 5-500
Ø max 1000

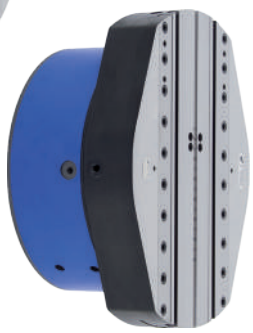

UT 5-630
Ø max 1250

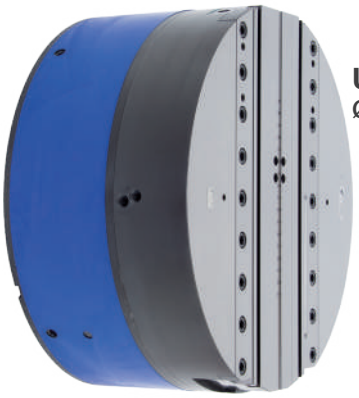

UT 8-800
Ø max 1600

UT 8-1000
Ø max 2000

UT 8-1250
Ø max 2500

UT 8-1600
Ø max 3200

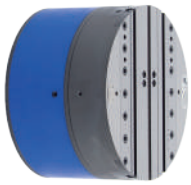

UT 3-360
Ø max 800

UT 5-800
Ø max 1600

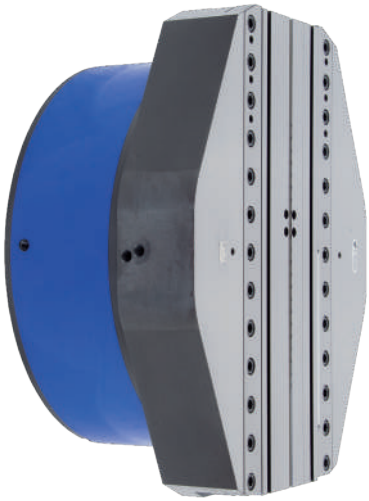

STANDARD

EXTENDED

ANGULAR HEADS

GEARBOX

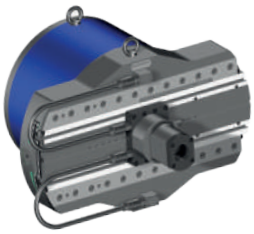

HOLE

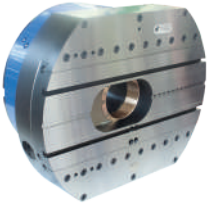

DOUBLE SLIDE

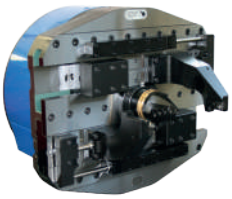

HIGH SPEED
(BALANCED)

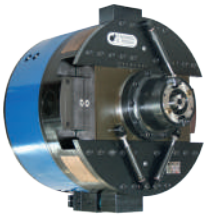

SPECIALS

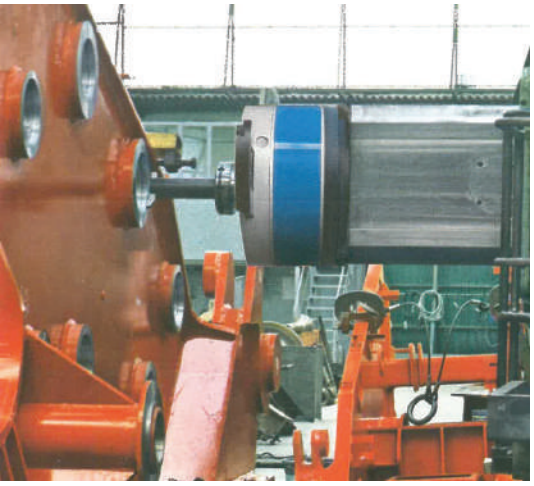
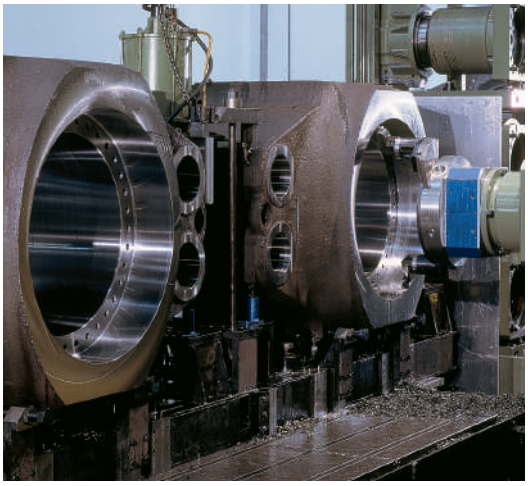
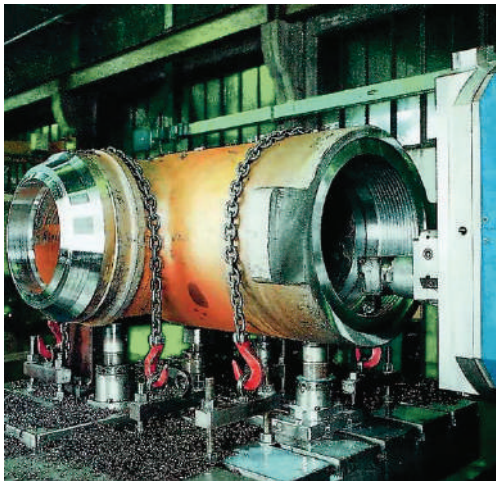
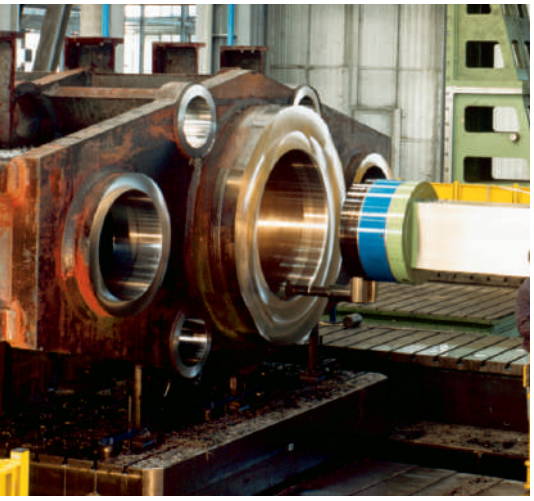
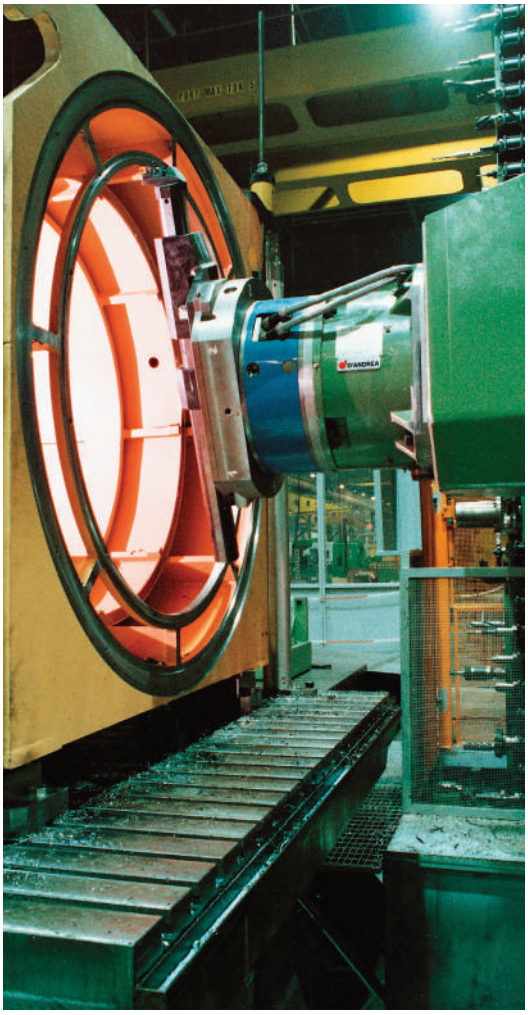
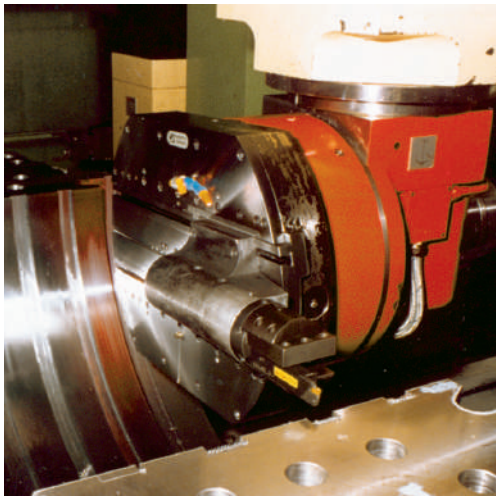

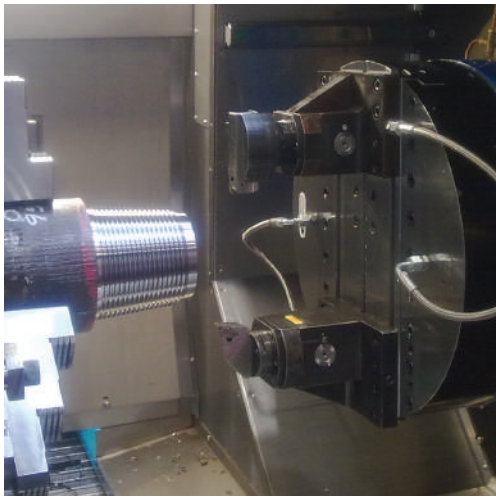
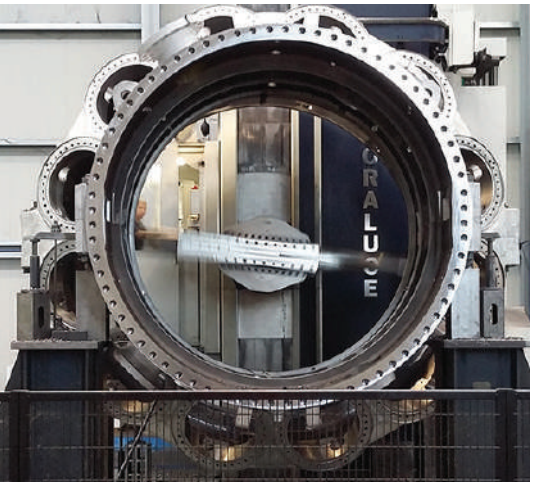
GRALUCE
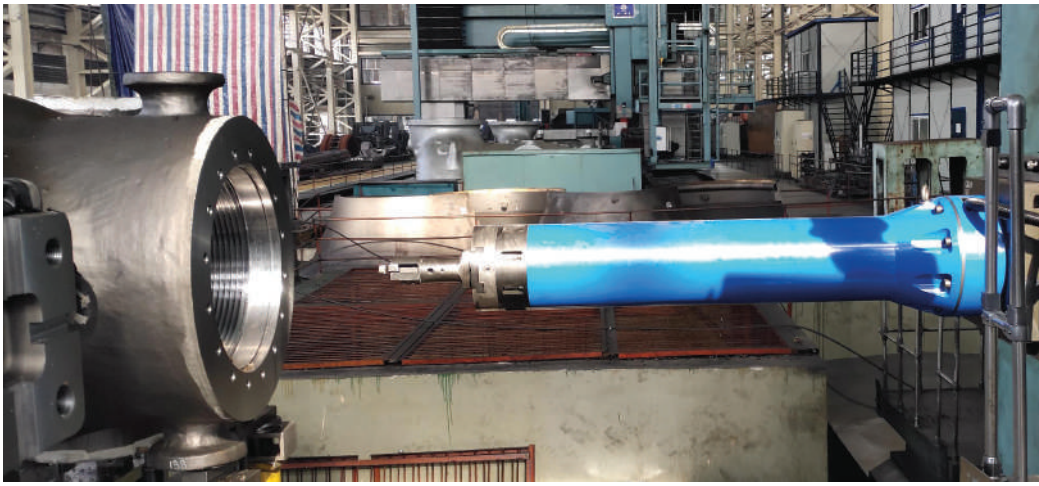

U-TRONIC

COMMAND

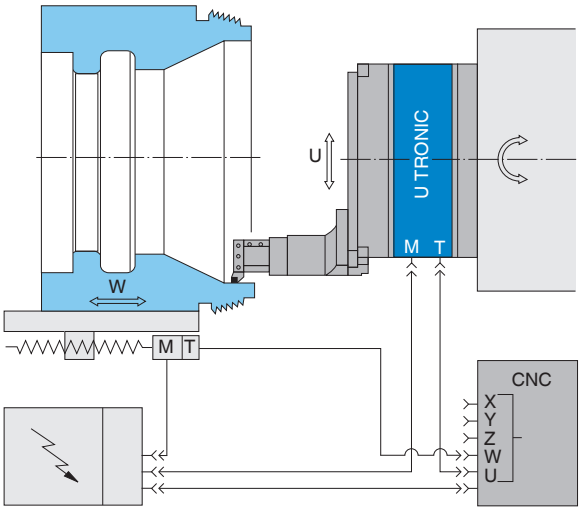

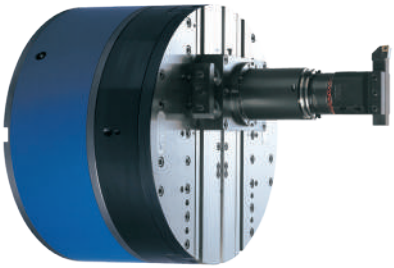

CNC

The control of the U-TRONIC heads takes place through the direct connection to the "U" axis of the machine numerical control. Through the interpolation of the axes, it offers the capabilities to perform any type of turning, boring, radiusing and spherical operations.

COMPONENTS

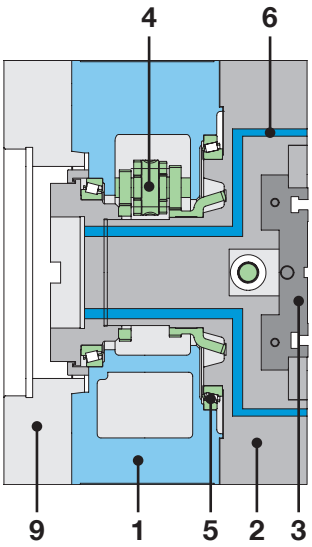

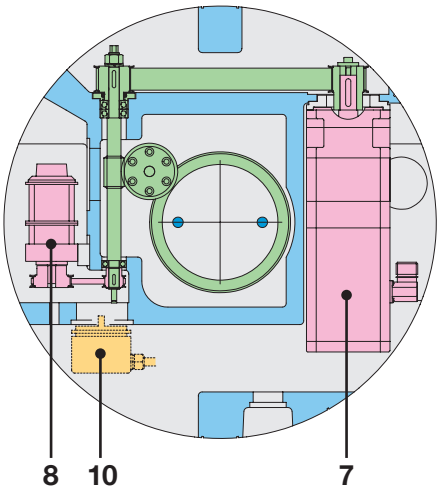

1. Stationary body
2. Rotating body
3. Tool slide
4. Gears
5. Bearings
6. Coolant way
7. Servomotor
8. Limit switches
9. Flange
10. Encoder on request

PREARRANGEMENTS

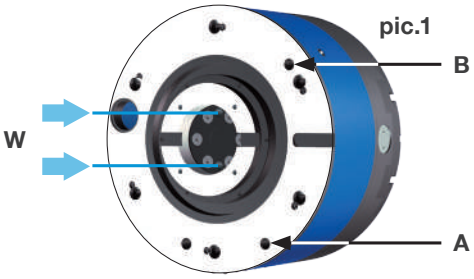

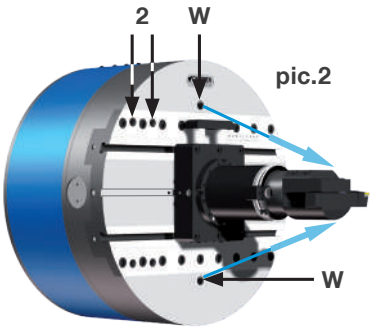

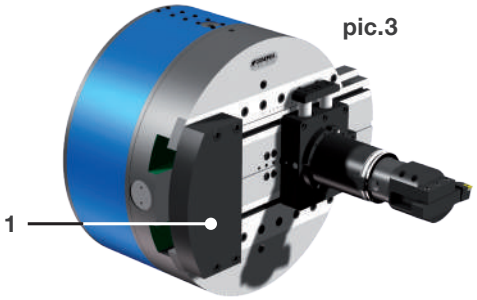

A-Internal pressurization pic.1
To prevent liquid and dust from getting into the motor, transducer, and limit switch areas, an Ø 8,5 **(A)** hole is provided for internal pressurization of the fixed body with an air inlet at **0.5-1 BAR.**

B-Automatic greaser pic.1
A Ø 8,5 **(B)** hole is provided on the head so that grease can be automatically put in the U-TRONIC.

Coolant supply pic.1-2
Internal coolant channels **(W)** are provided inside the U-TRONIC head that allow coolants to pass through from the machine spindle until the two threaded holes located next to the slide **(W).** Hoses can be screwed on these holes to bring coolant directly to the tool. **Max pressure BAR 40.**

Balancing pic.3
To improve working conditions and balance the tool position when it appears shifted in relation to the U-TRONIC axis, counterweights **(1)** can be applied using the threaded holes **(2)** located on the rotating body.

APPLICATION

U-TRONIC is applied manually or automatically by using a flange for fastening to the machine tool and a driving plate for the rotary body rotation.

It is applied manually using a flange for fastening with a cam lock quick coupling, or automatically with a palletized system and special connectors.

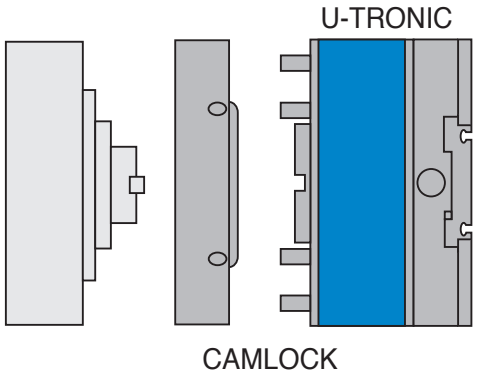

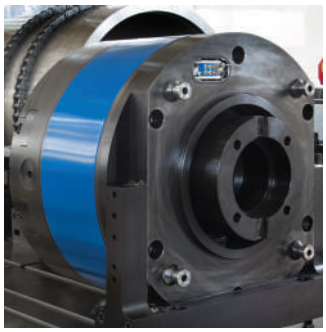

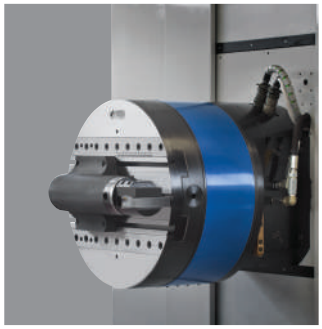

U-TRONIC 3-360 S

The following layout shows the basic information for the flange manufacturing with cam lock rapid coupling.
The U-TRONIC UT 8-800 S and UT 8-1000 S do not include the fastening with a cam lock quick coupling.

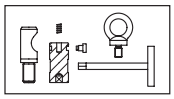

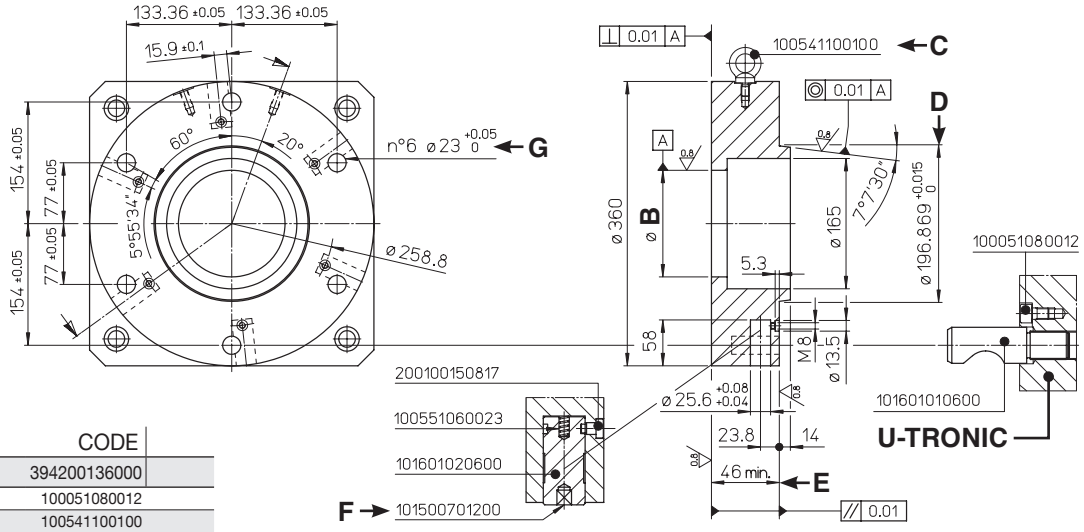

REF	CODE
KIT CAMLOCK UT 360	394200136000
n°6 VTC 8x12	100051080012
n°1 EYEBOLT M10 UT BASE 3	100541100100
n°6 SPRING UT BASE 3-5	100551060023
n°1 KEY FOR CAM 6 UT BASE 3	101500701200
n°6 CAMLOCK PIN 6 UT BASE 3	101601010600
n°6 CAMLOCK CAM 6 UT BASE 3	101601020600
n°6 PIN FOR CAM 6 UT BASE 3	200100150817

B Spindle centering **C** Eyebolt **D** Control with gauge **E** Measurement to control depending on spindle protrusion **F** Spanner **G** Bores min. depth 46

U-TRONIC 5-500 / 5-630 / 5-800 S

The following layout shows the basic information for the flange manufacturing with cam lock rapid coupling.
The U-TRONIC UT 8-800 S and UT 8-1000 S do not include the fastening with a cam lock quick coupling.

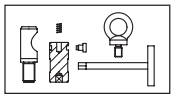

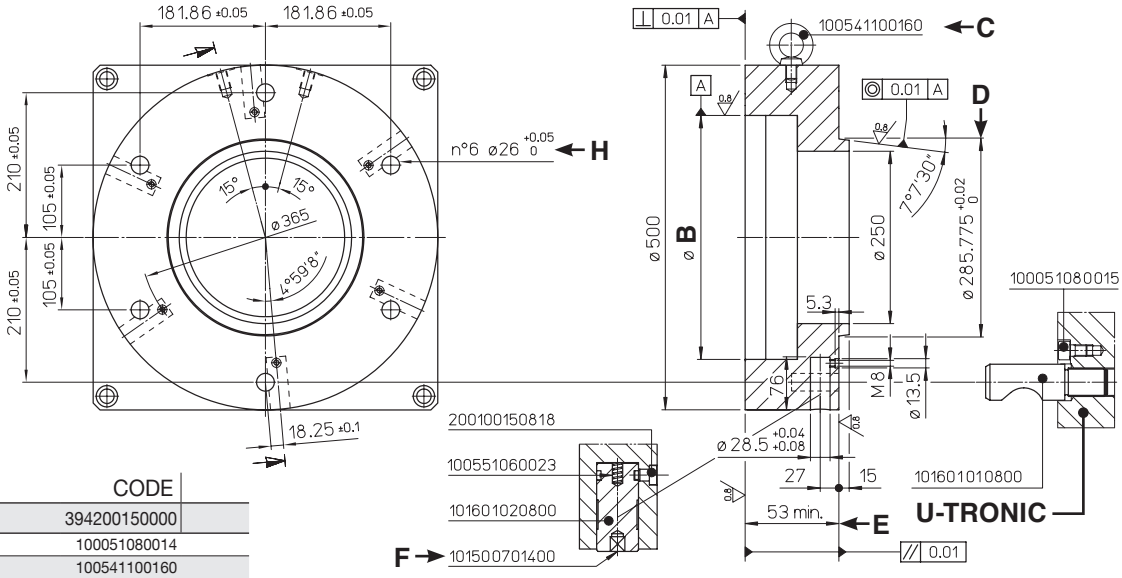

REF	CODE
KIT CAMLOCK UT 500	394200150000
n°6 VTC 8x14	100051080014
n°1 EYEBOLT M16 UT BASE 5	100541100160
n°6 SPRING UT BASE 3-5	100551060023
n°1 KEY FOR CAM 8 UT BASE 5	101500701400
n°6 CAMLOCK PIN 8 UT BASE 5	101601010800
n°6 CAMLOCK CAM 8 UT BASE 5	101601020800
n°6 PIN FOR CAM 8 UT BASE 5	200100150818

B Spindle centering **C** Eyebolt **D** Control with gauge **E** Measurement to control depending on spindle protrusion **F** Spanner **H** Bores min. depth 53

UT 3-360 / 5-500 / 5-630 / 5-800 / 8-800 / 8-1000 S

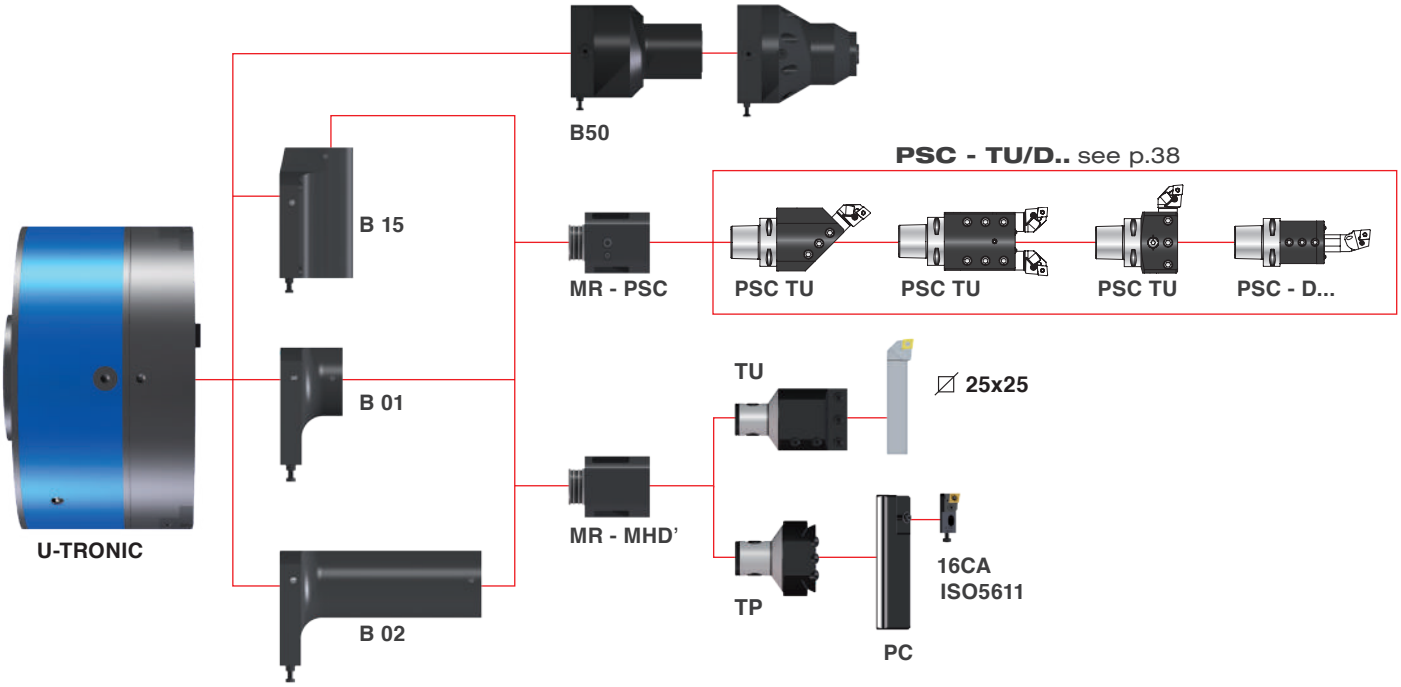

B01 / B02 / B15 - PSC / MHD'

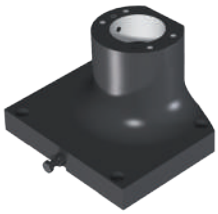

B01 - B02 PSC / MHD'

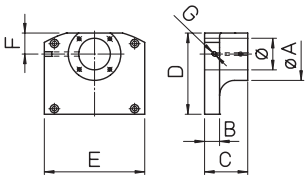

B15 PSC / MHD'

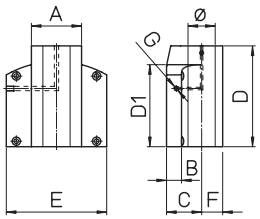

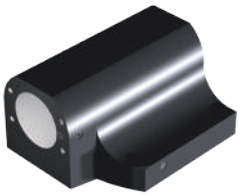

U-TRONIC	REF.	CODE	Ø^{H7}	A	B	C	D	D1	E	F	G	kg
UT 3-360 S	**B01 PSC63-MHD'80**	443006300310	63	105	25	31	137		150	42	G1/8'	3.5
	B02 PSC63-MHD'80	443006301610	63	105	27	161	137		150	42	G1/8'	10
	B15 PSC63-MHD'80	445006301210	63	105	32	60	121		150	42	G1/8'	10
UT 5-500 / 5-630 / 5-800 S	**B01 PSC63-MHD'80**	443006300861	63	105	30	86	167		200	42	G1/8'	11
	B02 PSC63-MHD'80	443006303310	63	105	30	331	167		200	42	G1/8'	22
	B15 PSC63-MHD'80	445006302010	63	105	31	70	201	170	200	42	G1/8'	6.5
	B01 PSC80-MHD'80	443007500710	75	133	30	71	185		200	50	G1/8'	10.5
	B02 PSC80-MHD'80	443007503160	75	133	32	316	235		200	50	G1/8'	34
	B15 PSC80-MHD'80	445007502620	75	133	30	85	262	200	200	50	G1/8'	32
UT 8-800 / 8-1000 S	**B01 PSC80-MHD'80**	443007501460	75	133	30	146	192		250	50	G1/4'	19
	B02 PSC80-MHD'80	443007506360	75	133	45	636	192		250	50	G1/4'	70
	B15 PSC80-MHD'80	445007503000	75	133	30	85	300	200	250	50	G1/4'	37

MR - PSC / MHD'

MR - PSC

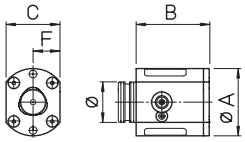

MR - MHD'

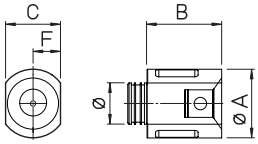

U-TRONIC	REF.	CODE	Øg6	PSC	MHD'	A	B	C	F	kg
UT 3 / 5 ... S	**MR - PSC 63**	450206301050	63	63		105	114	84	42	6
UT 3 / 5 ... S	**MR - MHD' 80/105**	450208001050	63		80	105	114	84	42	6.5
UT 5 / 8 ... S	**MR - PSC 80**	450208001335	75	80		133	129	100	50	11
UT 5 / 8 ... S	**MR - MHD' 80/133**	450208001330	75		80	133	129	100	50	11

K03 PSC 63-80

1 B 01
1 B 02
1 B 15
1 MR

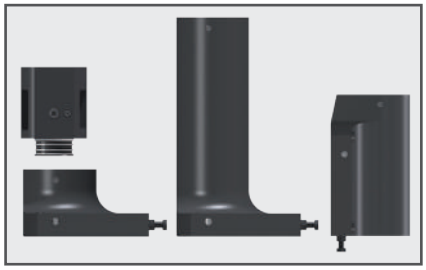

REF.	CODE
KIT K03 PSC 63 UT 3-360 S	501703259501
KIT K03 PSC 63 UT 5-500 / 5-630 / 5-800 S	501705009501
KIT K03 PSC 80 UT 5-500 /5-630 / 5-800 S	501705009502
KIT K03 PSC 80 UT 8-800 / 8-1000 S	501708009501

K03 MHD'80

1 B 01
1 B 02
1 B 15
1 MR
1 TU

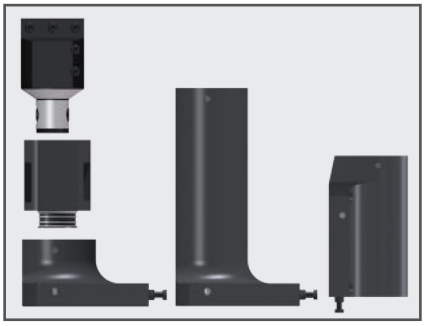

REF.	CODE
KIT K03 UT 3-360 S	501703259500
KIT K03 UT 5-500 /5-630 /5-800 S	501705009500
KIT K03 UT 8-800 / 8-1000 S	501708009500

TU - MHD'

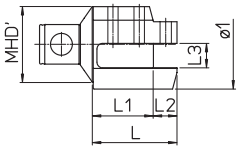

♦ Use with **RD 80/ p.12**

U-TRONIC	REF.	CODE	MHD'	Ø1	L	L1	L2	L3	kg
UT 3 / 5 / 8 ... S ♦	**TU 50/60.16**	460505016001	50	60	60	44	16	16	1.2
UT 3 / 5 / 8 ... S ♦	**TU 63/75.20**	460506320001	63	75	75	55	20	20	4
UT 3 / 5 / 8 ... S	**TU 80/95.25**	460508025001	80	95	90	65	25	25	3.6

TP - MHD'

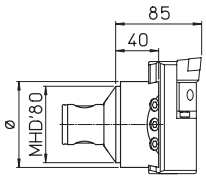

U-TRONIC	REF.	CODE	Ø	kg
UT 3-360 S	**TP 80/90.50**	460408050001	90	2.3
UT 5-500 / 5-630 / 5-800 S	**TP 80/90.50**	460408050001	90	2.3
UT 8-800 / 8-1000 S	**TP 80/125.50**	460408050002	125	3.2

PC

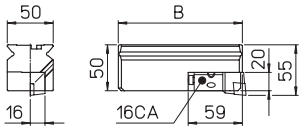

U-TRONIC	REF.	CODE	Ø	kg
UT 3-360 S	**PC 11.50**	433050160950	95	1.3
UT 5-500 / 5-630 / 5-800 S	**PC 12.50**	433050161350	135	2
	PC 13.50	433050162000	200	3.2
UT 8-800 / 8-1000 S	**PC 14.50**	433050163000	300	5

CARTRIDGES 20CA ISO 5611

PTGNL16CA-16	
CODE	483010161001
△	TNM1604

PCLNL16CA-12	
CODE	483010161002
⬡	CNM1204

PSSNL16CA-12	
CODE	483010161003
⬡	SNM1204

PSRNL16CA-12	
CODE	483010161004
⬡	SNM1204

TOOLHOLDER WITH AUTOMATIC TOOL CHANGE B50

B50 MECHANICAL

B50 HYDRAULICS

pic.1

U-TRONIC	REF.
UT 3-360 S	**- HSK - A63 - A100**
UT 5-500 / UT 5-630 / 5-800 S	**B50 - DIN69871-B 50**
UT 8-800 / 8-1000 S	**- MAS BT50**

U-TRONIC	REF.
UT 3-360 S	**- PSC / HSK**
UT 5-500 / UT 5-630 / 5-800 S	**B50 - DIN69871**
UT 8-800 / 8-1000 S	**- MAS BT**

Special and HYDRAULICS B50 toolholders for automatic tool change, can be provided on request **(pic.1).**

CHIP REMOVAL CAPACITY

The chip removal rates are indicative for normal working conditions on steels with hardness in the range of 160-200 HB, (average Ks = 2000 N/mm2) recommended Vt 120/160 m/min.

The optimal values and working times must be determined with trials.

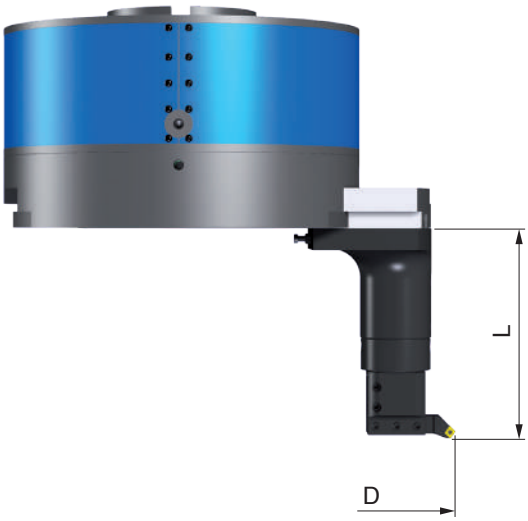

U-TRONIC 3-360 S

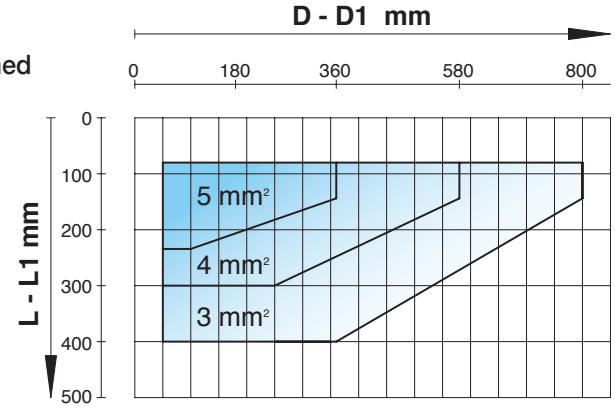

U-TRONIC 5-500 / 5-630 / 5-800 S

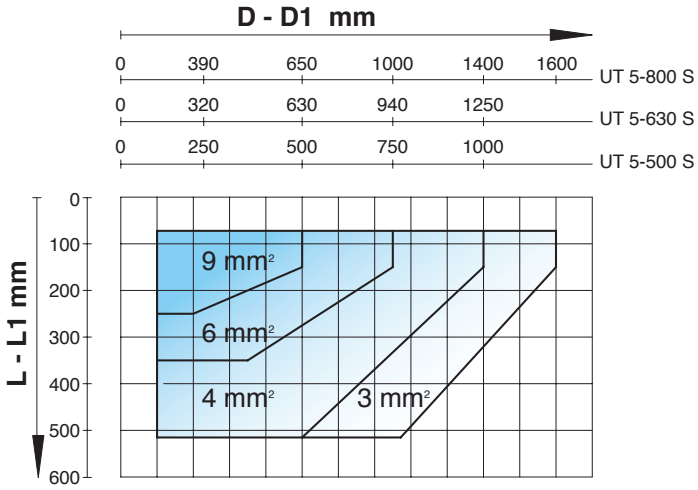

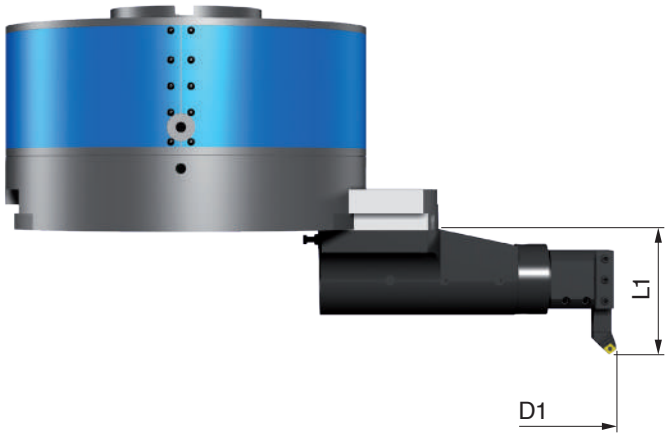

U-TRONIC 8-800 / 8-1000 S

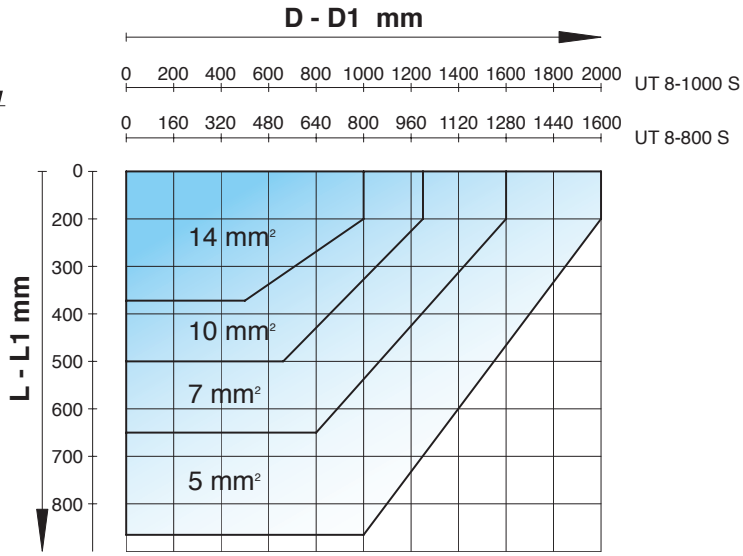

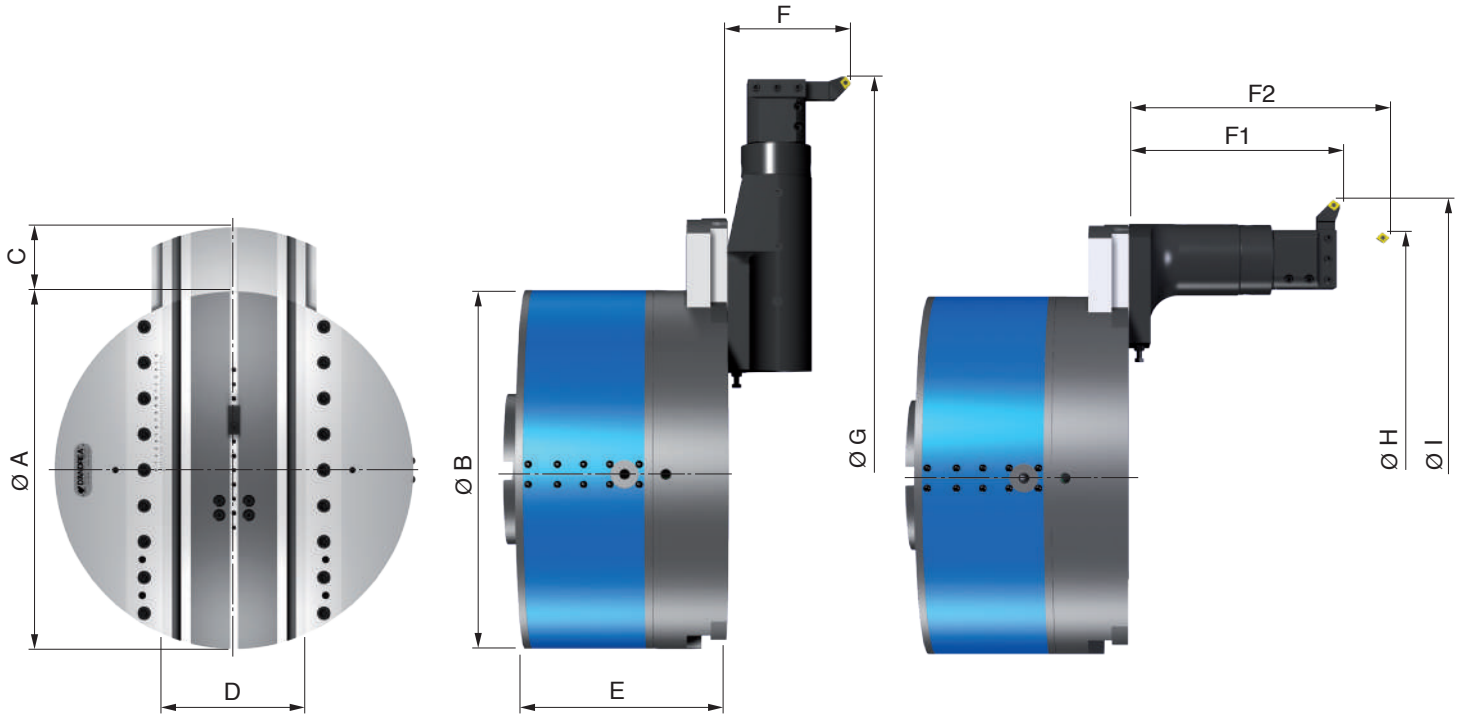

TECHNICAL DATA		UT 3-360 S	UT 5-500 S	UT 5-630 S	UT 5-800 S	UT 8-800 S	UT 8-1000 S
Ø A	mm	360	500	630	800		1000
Ø B	mm	360	500			800	
C Radial traverse	mm	120	160	200	250	280	350
D	mm	154.6	199.6		230	250	260
E	mm	235	278.5	282	370	410	415
Ø G x F	mm	800 x 140	1000 x 150	1250 x 150	1600 x 150	1600 x 160	2000 x 160
Ø H x F2	mm	400 x 400	560 x 540	700 x 540	830 x 540	850 x 860	1050 x 860
Ø I x F1	mm	670 x 240	850 x 295	1050 x 295	1300 x 295	1250 x 370	1600 x 370
Max. mm/min	mm/min	1 ÷ 400				1 ÷ 500	
Max. ↻/min	RPM	500	315	250	200		160
Weight	Kg	130	230	310	530	1000	1200
Radial force	daN	400	500			1000	
Torque	daNm	400	800			1000	
Repeatibility accuracy	mm	0.003					
Boring accuracy		IT7					
Max chip removal	mm^2 C40	5	9			14	
Rapid trasverse	mm/min	400				500	
Roughness	Ra	0.8 in optimal working conditions					

TA-CENTER 2 TA-C2

TA-CENTER 2 Boring and facing heads uniquely designed for machines with automatic tool changers and applicable on all machining centers. The toolholder slide movement is managed by an external U-DRIVE unit attached to the spindle flange.

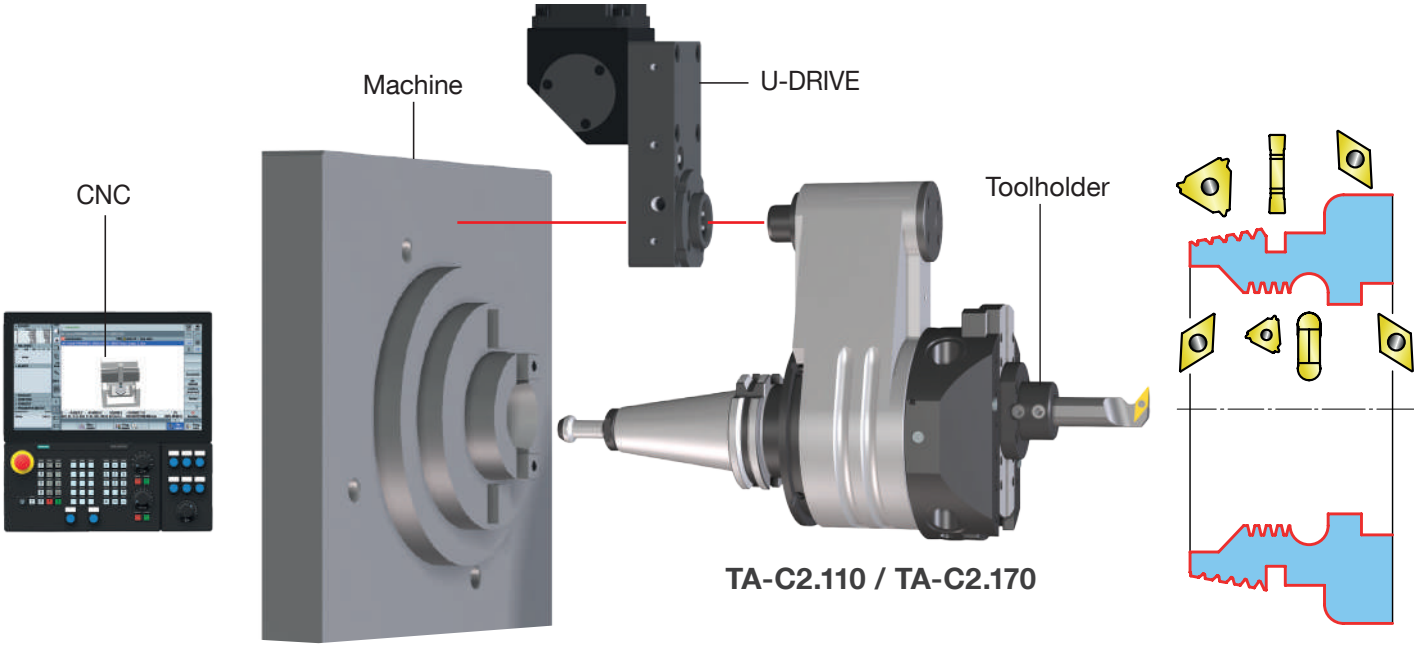

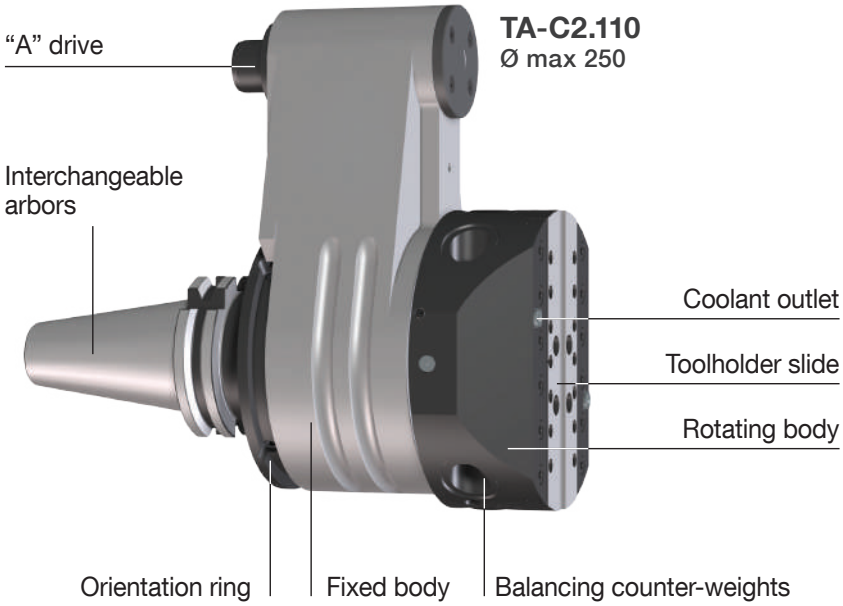

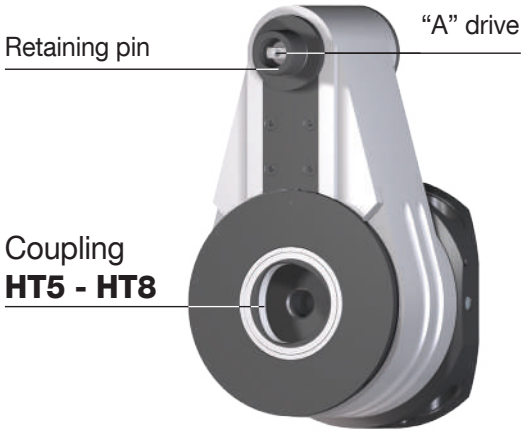

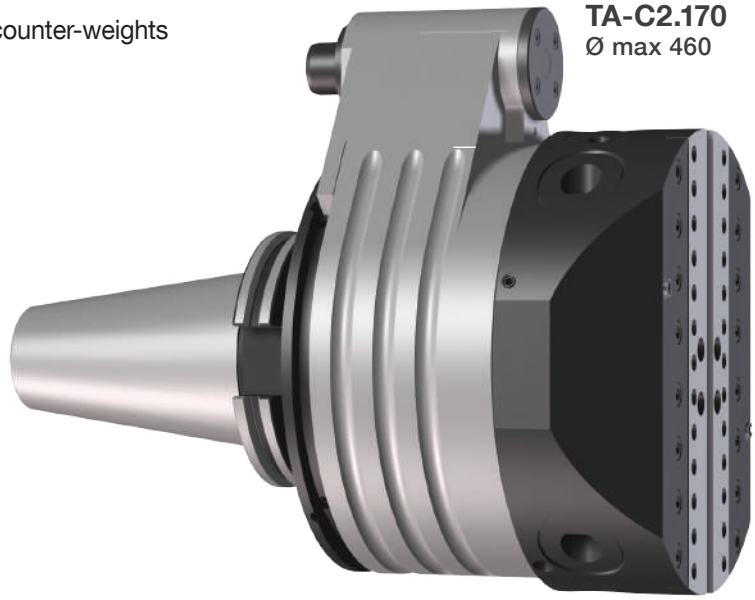

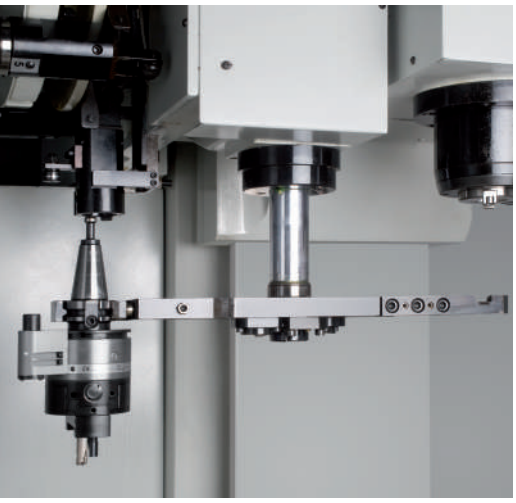
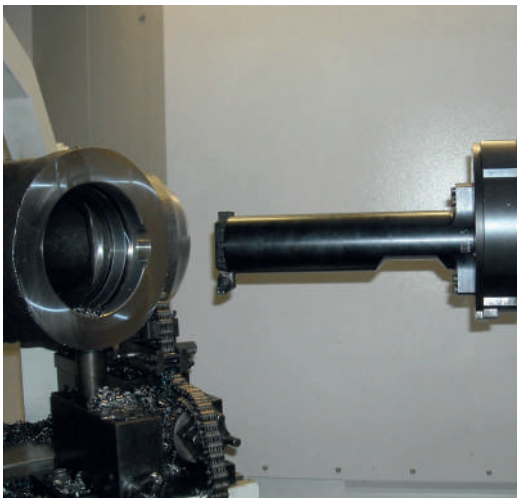

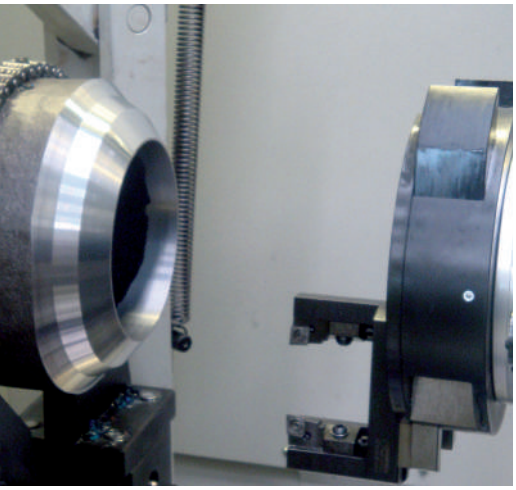

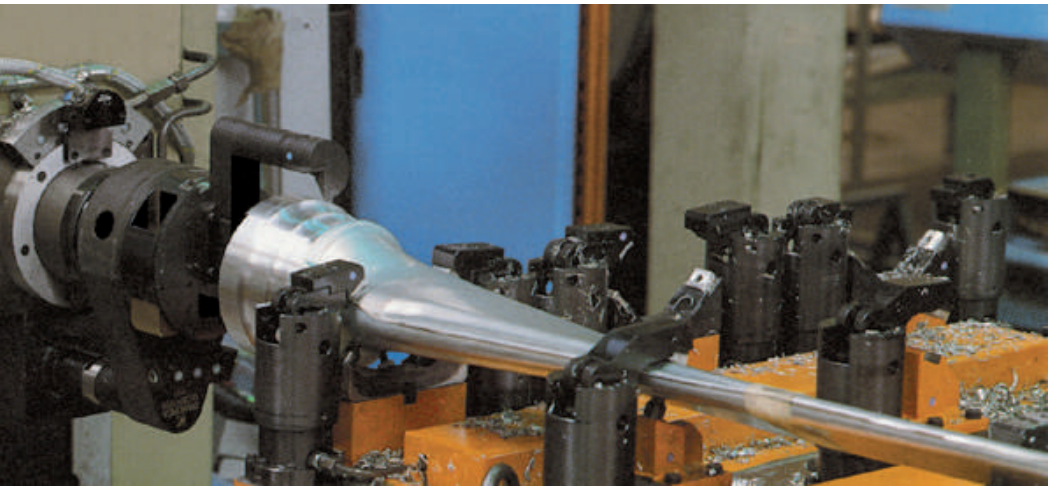
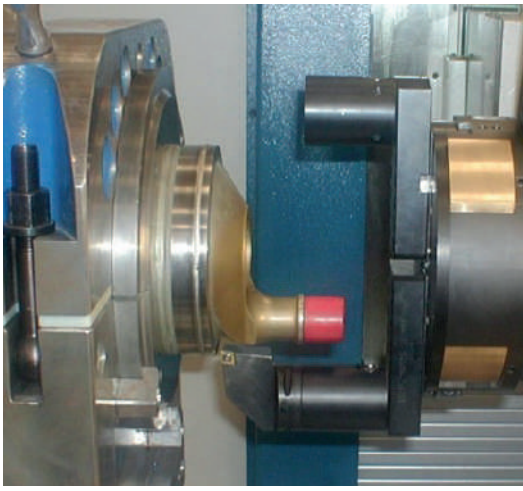
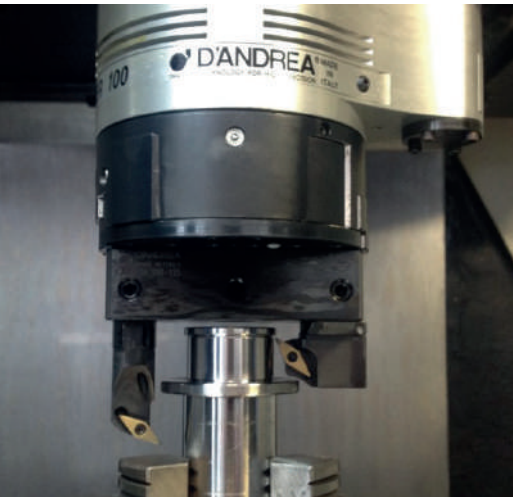
D'ANDREA
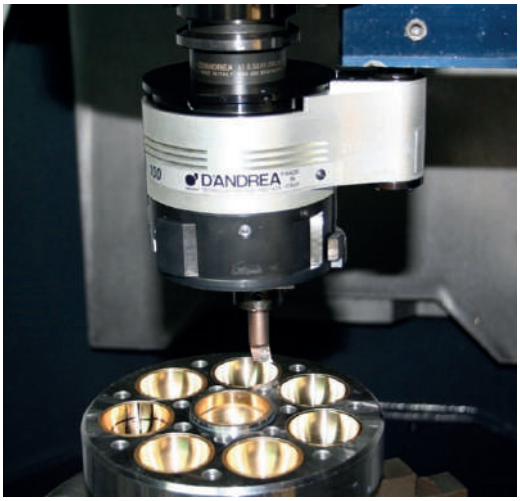
D'ANDREA
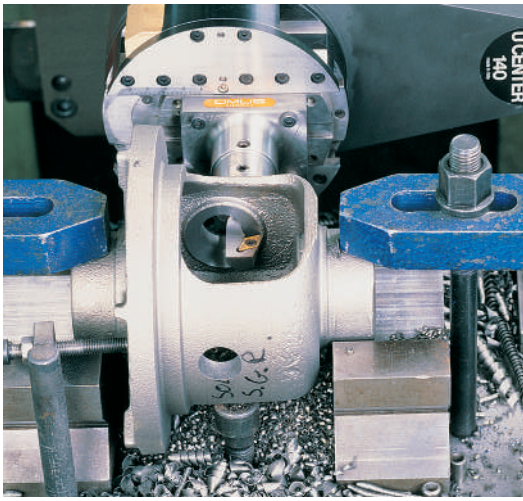

TA-CENTER 2 TA-C2

COMMAND

The TA-CENTER 2 boring and facing heads are designed to be used on machines with automatic tool changers, therefore essentially on all machining centers. The control of the feed, the tool-holder slide and the tool position, also during rotation, are controlled by a **U-DRIVE** gearbox unit. This group is managed directly by a U-axis of the numerical control of the machining center. A machining center set up in this way offers several additional and different operations including internal and external turning, grooves, taper bores, concave and convex radius machining, cylindrical and conical threads and facing for serration.

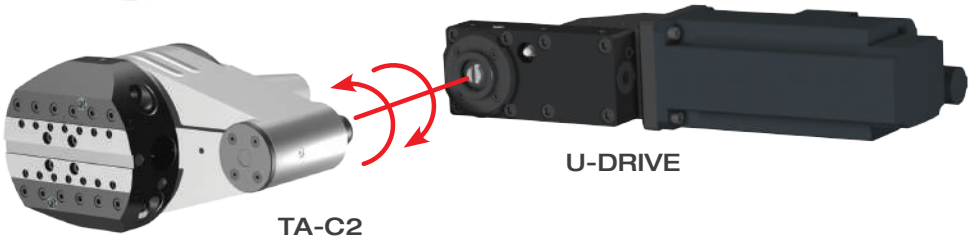

COMPONENTS U-DRIVE

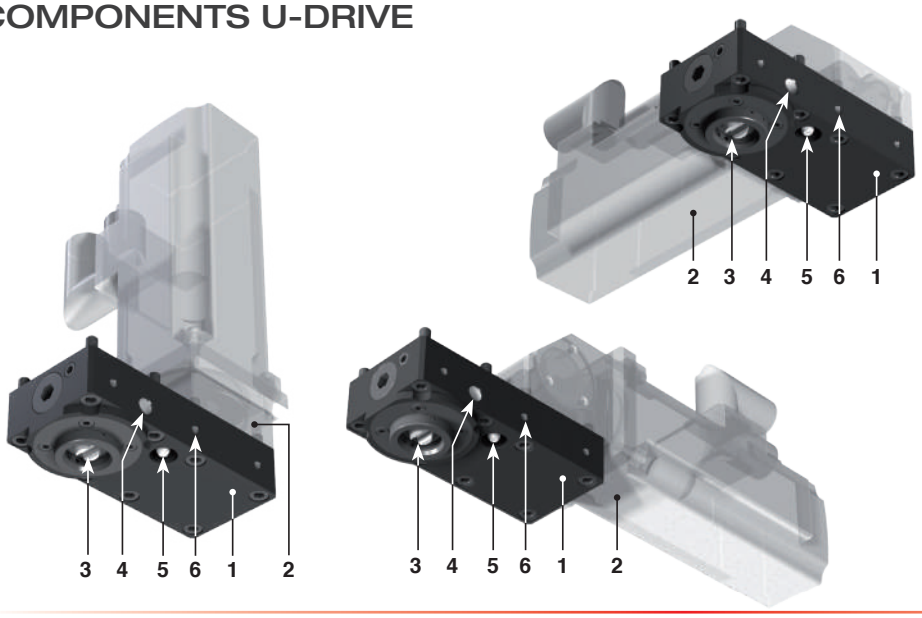

1. Base element
2. Servomotor
3. Mechanical unit for automatic hook-up to the TA-CENTER 2 drive
4. The unit comes with air inlet connection for cleaning the drive
5. Manual lubrication
6. n°6 M5x8 holes to be used for securing a possible protective casing

PREARRANGEMENTS

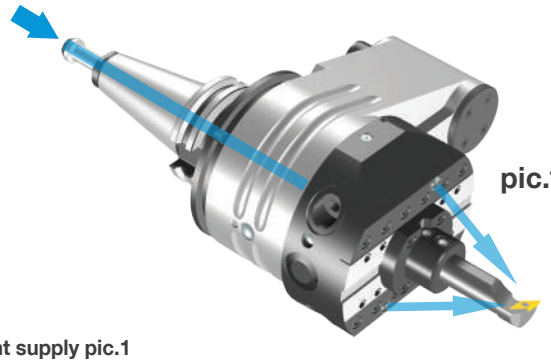

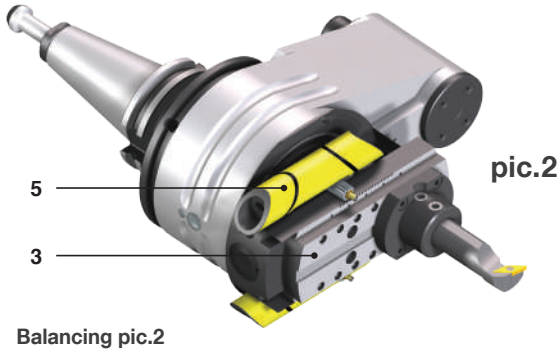

Coolant supply pic.1

Coolant exits from the two adjustable nozzles in the TA-C2 located next to the slide after crossing the taper and the rotating body of the head. This noteworthy advantage ensures longer duration of the cutting edge, quicker cutting speed and for obtaining good surface finishes. The centralized supply of coolant does not harm the TA-C2 of which the internal labyrinth protected by an O-ring. It is advisable to not exceed **50 BAR** of pressure.

Balancing pic.2

TA-CENTER heads are designed with two counter-weights **(5)** for automatic balancing, that move opposite to the slide **(3)** allowing to machine at a higher number of rpm without noticeable oscillations.

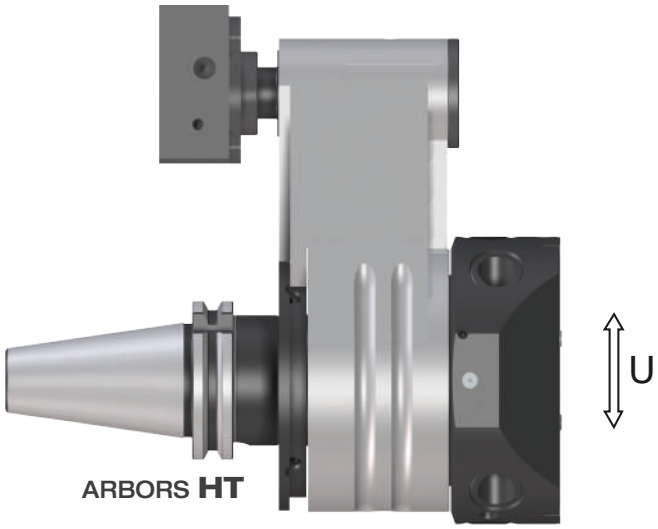

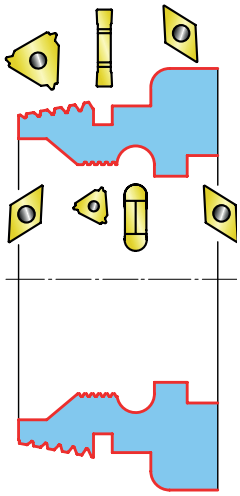

CHIP REMOVAL CAPACITY
TA-C2 / TA-T2

The chip removal rates are indicative for normal working conditions on steels with hardness in the range of 160-200 HB, (average Ks = 2000 N/mm2) recommended Vt 120/160 m/min.

The optimal values and working times must be determined with trials.

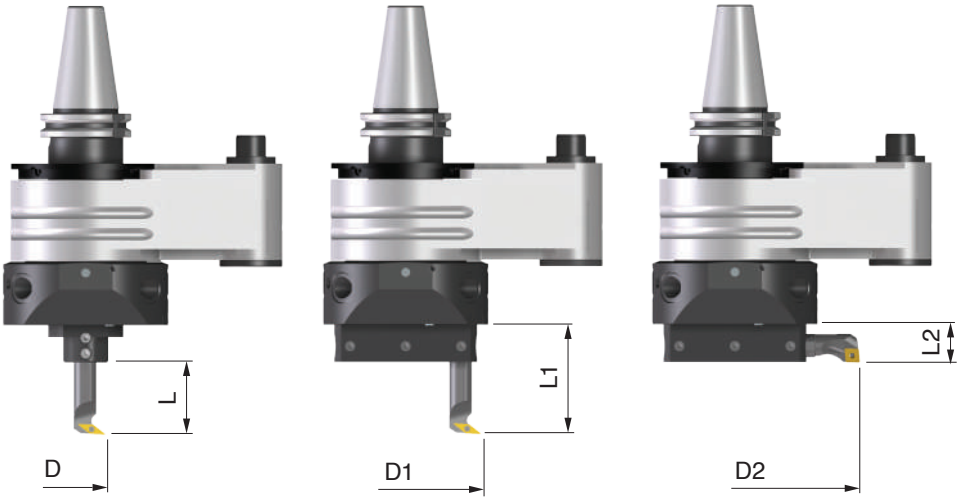

	TA-C2.110 TA-T2.110	TA-C2.170 TA-T2.170
D	10 ~ 102	20 ~ 194
L	65	100
D1	96 ~ 126	153 ~ 263
L1	90	140
D2	126 ~ 250	203 ~ 460
L2	25.5	38.5

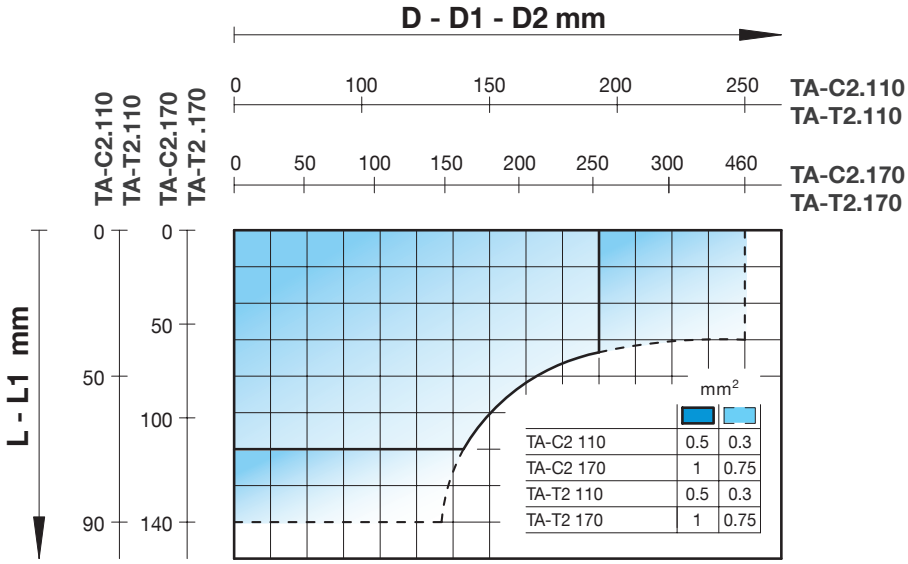

TA-CENTER 2

K02

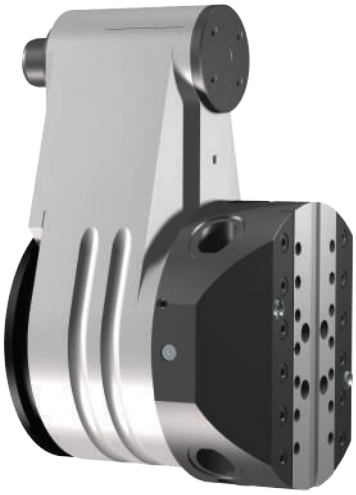

REF.	CODE		
K02 TA-C2.110 I.80 R. 0.25	501251100800		
K02 TA-C2.110 I.80 R. 0.5	501251100801		
K02 TA-C2.110 I.110 R. 0.25	501251101100		
K02 TA-C2.110 I.110 R. 0.5	501251101101		
K02 TA-C2.170 I.110 R. 0.25	501251701100		
K02 TA-C2.170 I.110 R. 0.5	501251701101		
U-DRIVE KB1-KA1			

For Interchangeability with previous version TA-CENTER, use **TA-C2** with mechanical ratio **R.0.5.**

ARBORS HT TA-C2 / TA-T2

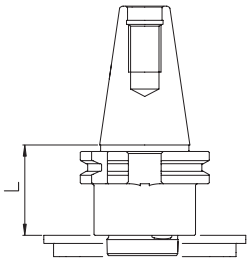

	REF.		CODE	L	Kg		
TA-C2.110 TA-T2.110	DIN69871-AD40	HT5 .36.5	41HT05024000	36.5	1.1		
	DIN69871-AD40	HT5 .44.5	41HT05024001	44.5	1.2		
	MAS403BT-AD40	HT5 .27	41HT05034000	27	1		
	MAS403BT-AD40	HT5 .36.5	41HT05034001	36.5	1.1		
	MAS403BT-AD40	HT5 .44.5	41HT05034002	44.5	1.2		
	HSK-A63	HT5 .54.5	41HT05046300	54.5	1.1		
	HSK-100	HT5 .60.5	41HT05041000	60.5	2.8		
	CAT40 UNC	HT5 .54.5	41HT05054000	54.5	1.3		
TA-C2.110	DIN69871-AD50	HT5 .36.5	41HT05025000	36.5	2.8		
	MAS403BT-AD50	HT5 .54.5	41HT05035000	54.5	3.7		
	CAT50 UNC	HT5 .36.5	41HT05055000	36.5	2.8		
TA-C2.170 TA-T2.170	DIN69871-AD50	HT8 .36.5	41HT08025000	36.5	3.4		
	MAS403BT-AD50	HT8 .38.5	41HT08035000	38.5	3.7		
	HSK-A100	HT8 .76.5	41HT08041000	76.5	4		
	CAT50 UNC	HT8 .50.5	41HT08055000	50.5	3.9		

P120 TA-C2 / TA-T2

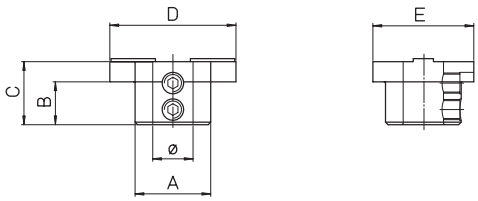

REF.	CODE	ØH7	A	B	C	D	E	Kg.		
P 120 TA-C2.110 / TA-T2.110	431550160250	16	30	17	25	50	40	0.2		
P 120 TA-C2.170 / TA-T2.170	431550250380	25	47	27.5	38	76	54	0.55		

P130 TA-C2 / TA-T2

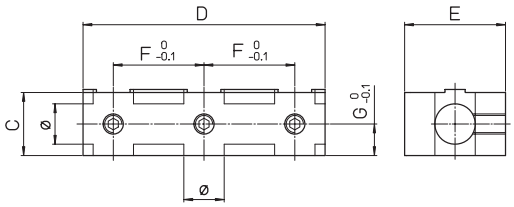

REF.	CODE	ØH7	C	D	E	F	G	Kg.		
P 130 TA-C2.110 / TA-T2.110	433040250950	16	25	95	40	37	10.5	0.5		
P 130 TA-C2.170 / TA-T2.170	433054381520	25	38	152	54	59.5	16.5	1.6		

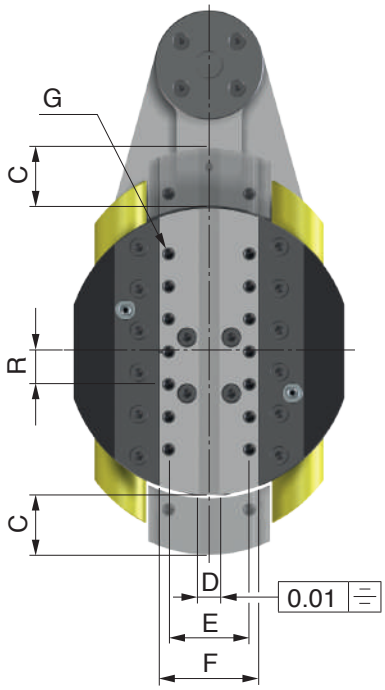

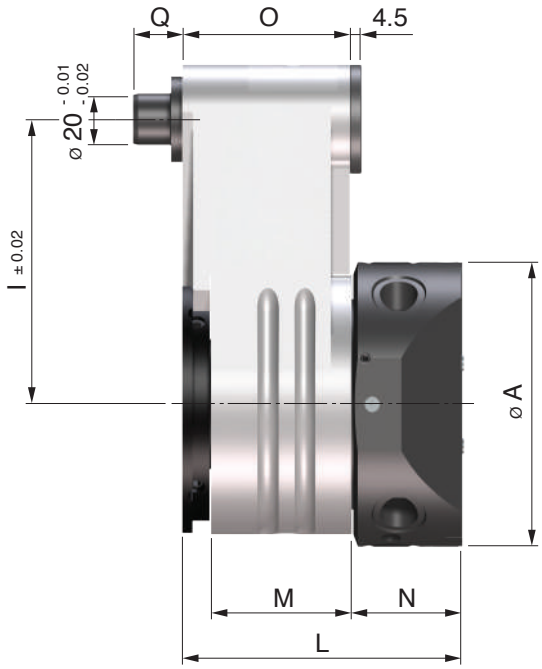

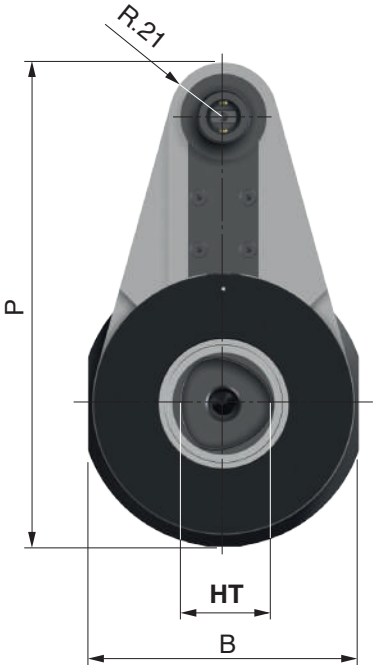

TECHNICAL DATA		TA-C2.110	TA-C2.170
Ø A	mm	110	170
B	mm	104	164
C radial traverse	mm	± 15	± 30
D	mm	$8^{+0.04}_{+0.02}$	$10^{+0.04}_{+0.02}$
E	mm	31	40
F	mm	38	54
G	mm	M 4	M5
HT	mm	**HT5**	**HT8**
I	mm	80/110	110
L	mm	108	136
M	mm	55	69
N	mm	42	56
O	mm	64.5	69
P	mm	156 / 186	216
Q	mm	19	19
R	mm	12.5	12.5
Feed	mm/min	1 ÷ 500	
Radial force	daN	150	250
Maximum speed	RPM	2000	1600
Torque	Nm	400	800
Weight without the cone	Kg	5.7 / 6.1	16.6
Boring accuracy		IT7	
Max workable ø	mm	250	460
Max chip removal on C40 steel	mm^2	0.5	1
Roughness	Ra	0.8 in optimal working conditions	

TA-TRONIC 2 TA-T2

TA-TRONIC 2 Boring and facing heads designed to be applied manually on small boring machines, machining centers and special machines. The integrated servomotor, connected to the CN, manages the toolholder slide movement. The stationary body is held in position by a flange or, for light operations, by a simple anti-rotation pin.

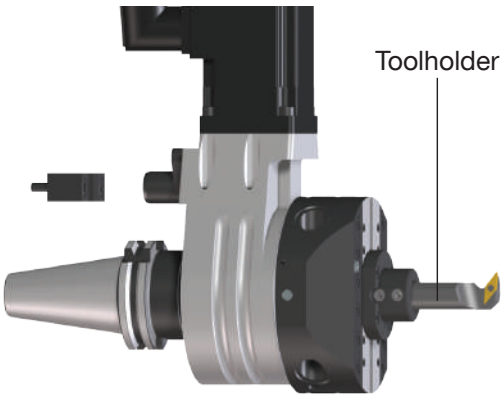

TA-T2.110 / TA-T2.170

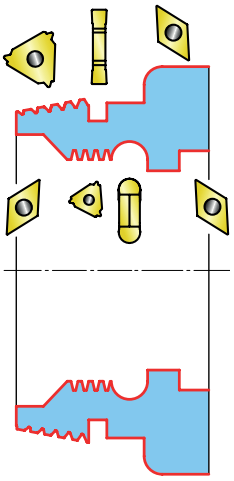

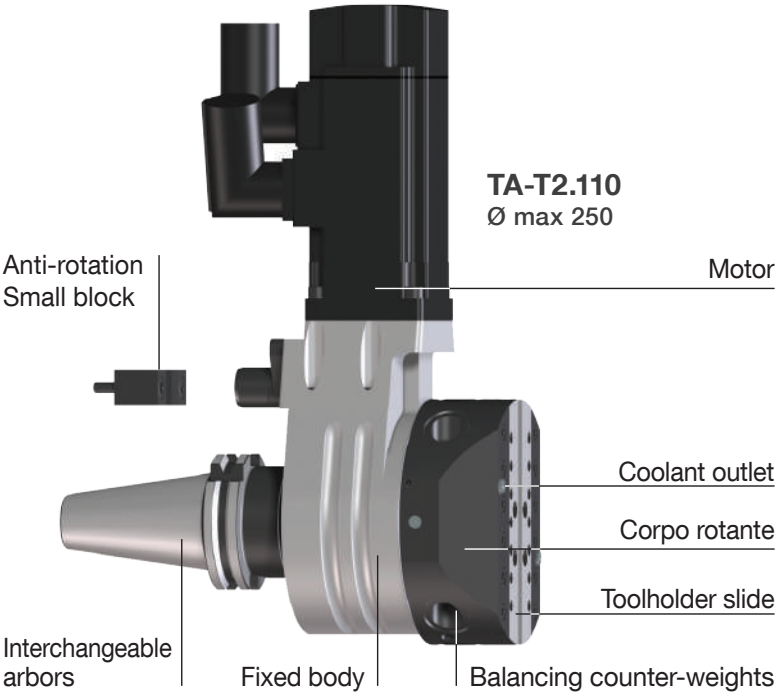

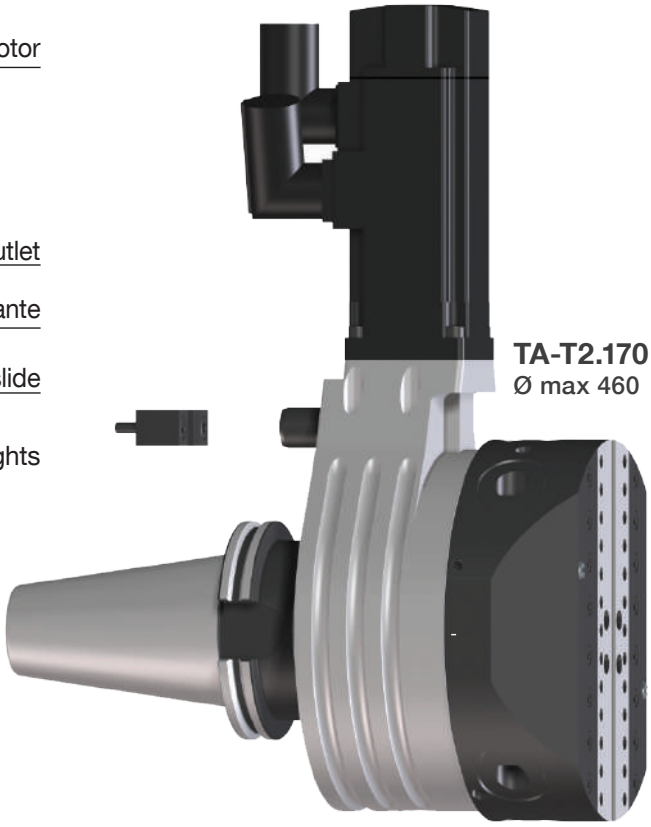

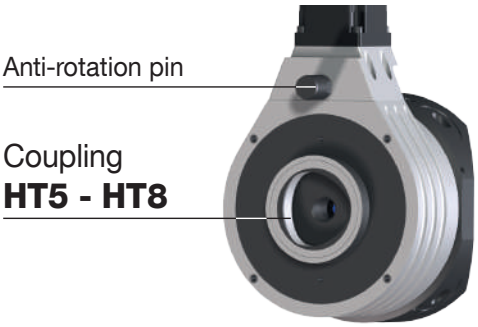

COMMAND

CNC

The control of the TA-T2 heads takes place through the direct connection to the "U" axis of the numerical control of the machine tool that allows boring, internal, external and back facing, internal and external turning, grooves, facing for serration, threads and taper bores, as well as concave and convex radius machining through interpolation with the other axes.

PREARRANGEMENTS

Coolant supply pic.1

In the TA-T2, coolant exits from the two adjustable nozzles are located next to the slide after crossing the taper and the rotating body of the head. This noteworthy advantage ensures longer duration of the cutting edge, quicker cutting speed and for obtaining good surface finishes.
The centralized supply of coolant does not harm the TA-T2 of which the internal labyrinth protected by an O-ring. It is advisable not to exceed **50 BAR** of pressure.

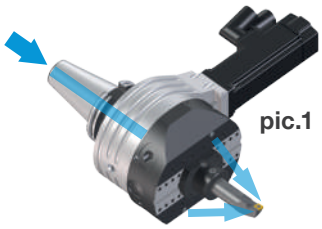

Balancing pic.2

TA-TRONIC heads are designed with two counter-weights **(5)** for automatic balancing, that move opposite to the slide **(3)** allowing to machine at a higher number of rpms without noticeable oscillations.

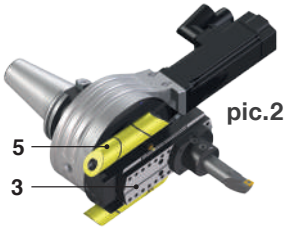

K02

ARBORS HT / P120 - P130 p.70

CHIP REMOVAL p.69

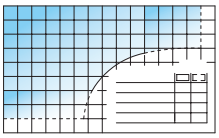

REF.	CODE		
K02 TA-T2.110 1FK7022-5AK74-1HA5	501201100400		
K02 TA-T2.110 FANUC βis 1/6000	501201100800		
K02 TA-T2.170 1FK7032-2AK74-1EA2	501201700400		
K02 TA-T2.170 FANUC βis 1/6000	501201700800		
FLANGIA TA-T2.110 / TA-T2.170			

TECHNICAL DATA

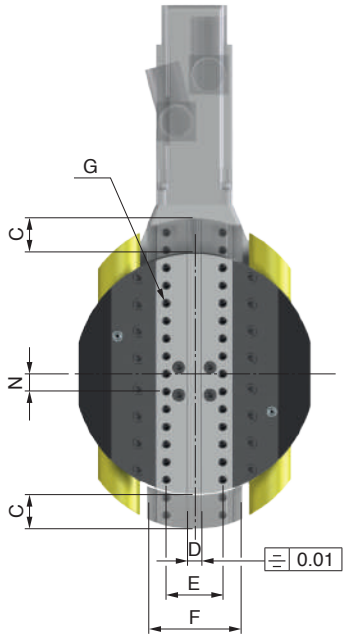

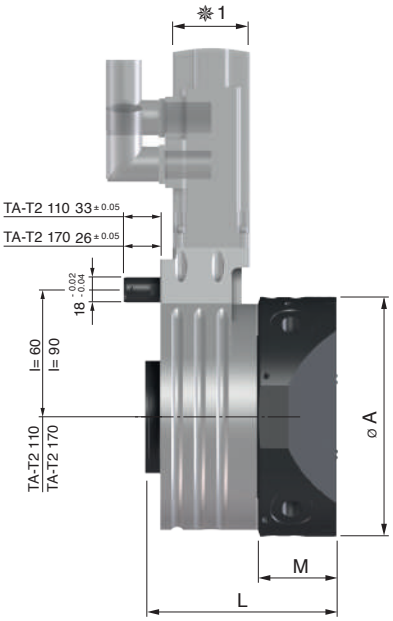

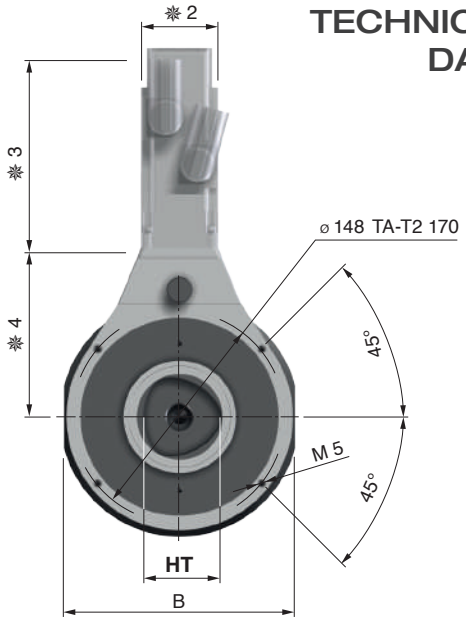

In optimal working conditions

TECHNICA DATA		TA-T2.110	TA-T2.170
Ø A	mm	110	170
B	mm	104	164
C radial traverse	mm	± 15	± 30
D	mm	$8^{+0.04}_{+0.02}$	$10^{+0.04}_{+0.02}$
E	mm	31	40
F	mm	38	54
G	mm	M4	M5
HT	mm	**5**	**8**
L	mm	108	136
M	mm	42	56
N	mm	12.5	
Feed	mm/min	1 ÷ 500	
Radial force	daN	150	250
Maximum speed	RPM	2000	1600

TECHNICA DATA		TA-T2.110	TA-T2.170
Torque	Nm	400	800
Weight without the cone	Kg	5.3 without motor	15.8 without motor
Boring accuracy		IT7	
Max workable ø	mm	250	460
Max chip removal on C40 steel	mm²	0,75	1
Roughness	Ra	0.8 in optimal working conditions	
SIEMENS Motors Dimensions		**Siemens 1FK7022**	**Siemens 1FK7032**
✻ 1		55	72
✻ 2		55	72
✻ 3		178	173
✻ 4		90	120
FANUC Motors Dimensions		**FANUC βis 1/6000**	
✻ 1		60	
✻ 2		60	
✻ 3		111.5	
✻ 4		90/120	

✻ **Rough measures that may vary on changing the motor**

AUTORADIAL

AUTORADIAL Automatic facing heads that can be applied on machining centers and on NC machines without the need for an electronic interface or interlock. They perform automatic working cycle without ever stopping the rotation of the spindle. Particularly suitable for machining of seats for elastic rings, facing for serration and creating “phonographic” spirals.

K02

SPECIAL AUTORADIALS ON REQUEST

REF.	Fmm/↻	K02 AR 125 CODE	K02 AR 160 CODE	
K02 AR...-F.0.05 ±0.005	0.05	500612520050	500616020050	
K02 AR...-F.0.1 ± 0.005	0.1	500612520100	500616020100	
K02 AR...-F.0.2 ± 0.01	0.2	500612520200	500616020200	
K02 AR...-F.0.3 ± 0.01	0.3	500612520300	500616020300	
K02 AR...-F.0.4 ± 0.02	0.4	500612520400	500616020400	
K02 AR...-F.0.5 ± 0.02	0.5	500612520500	500616020500	
K02 AR...-F.0.6 ± 0.02	0.6	500612520600	500616020600	

K-NC

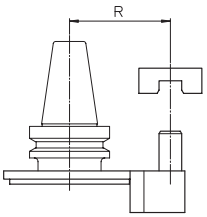

REF.	R.80 CODE		R.110 CODE	
K-NC R...-AR125	394112508002		394112511002	
K-NC R...-AR160	394116008002		394116011003	

P110

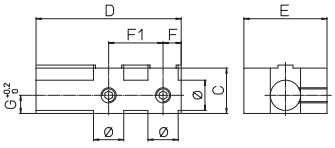

REF.	CODE	ØH7	C	D	E	F	F1	G	Kg.	
AR 125 - P 110	433056381200	25	39	121	56	15	45.5	16	1.3	
AR 160 - P 110	433063481600	32	49	164	63	19	63	21	2.5	

MHD’

REF.	MHD’ Complete range of arbors on page 8
AR 125	63
AR 160	80

INTERCHANGEABLE FEEDS

Fmm/↻

REF.		Fmm/↻	K02 AR 125 CODE		K02 AR 160 CODE	
F. 0.05-AR...	± 0.005	0.05	382006105001		382006205001	
F. 0.1 - AR...	± 0.005	0.1	382006110001		382006210001	
F. 0.2 - AR...	± 0.01	0.2	382006120001		382006220001	
F. 0.3 - AR...	± 0.01	0.3	382006130001		382006230001	
F. 0.4 - AR...	± 0.02	0.4	382006140001		382006240001	
F. 0.5 - AR...	± 0.02	0.5	382006150001		382006250001	
F. 0.6 - AR...	± 0.02	0.6	382006160001		382006260001	

CHIP REMOVAL CAPACITY - MAX ROTATION SPEED

The chip removal rates are indicative for normal working conditions on steels with hardness in the range of 160-200 HB, (average Ks = 2000 N/mm2) recommended Vt 120/160 m/min.

The optimal values and working times must be determined with trials.

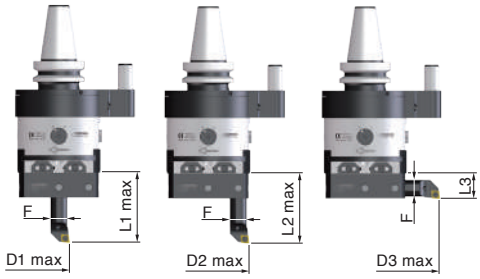

	AR 125	AR 160
F	25	32
D1 max	99	144
L1	160	200
D2 max	190	270
L2	160	200
D3 max	320	400
L3	40	50

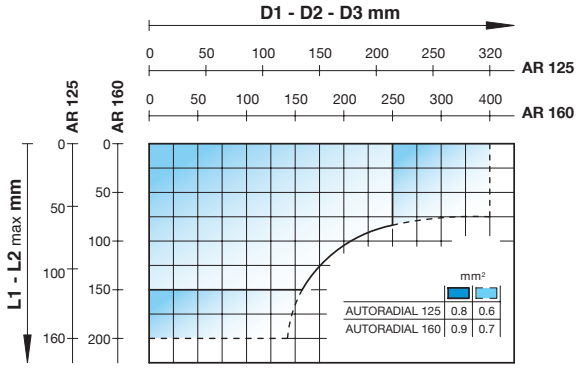

TECHNICAL DATA

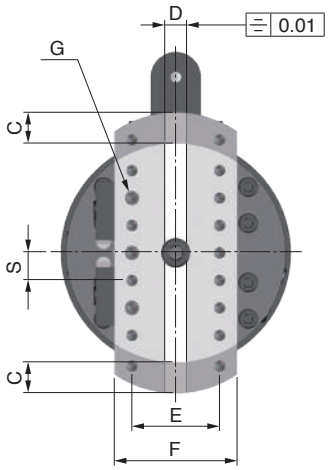

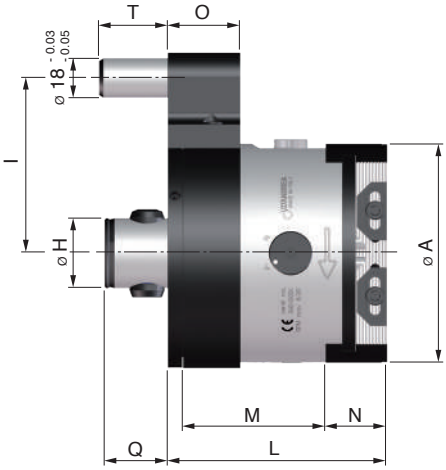

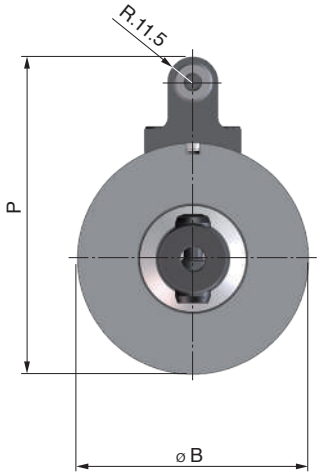

TECHNICAL DATA		AR 125	AR 160
Ø A	mm	125	160
Ø B	mm	130	130
C radial traverse	mm	± 20	± 35
D	mm	$10^{+0.03}_{0}$	$12^{+0.03}_{0}$
E	mm	40	50
F	mm	$63^{-0.003}_{-0.007}$	$80^{-0.003}_{-0.007}$
G	mm	M5	M6
Ø H	mm	(MHD’63) $42^{-0.005}_{-0.008}$	(MHD’80) $42^{-0.005}_{-0.008}$
I	mm	80/110	80/110
L	mm	110	125

TECHNICAL DATA		AR 125	AR 160
M	mm	75	83
N	mm	28	35
O	mm	35	35
P	mm	156.5 / 186.5	171.5 / 201.5
Q	mm	38.5	44.5
S	mm	12.5	15
T	mm	39.5	45.5
Maximum speed	RPM	500	400
Weight without the cone	Kg	9	14
Quick return	mm/↻	0.8	0.8

FACING AND BORING HEADS

TA-SENSITIV 2 - Boring and facing heads, applicable for milling machines, boring mills and radial drills with the possibility of manual adjustments during **machine stops** and automatic feeds during the revolution of the machine spindle.
It's possible to carry out external and internal facing operations, backward operations, cylindrical and conical borings, internal and external grooves, turning and chamfers.
The arbor is interchangeable and, thanks to the MHD' coupling, it allows the use of all available arbors from the MHD' modular system.

TA-S2.120 max Ø 250 TA-S2.170 max Ø 400

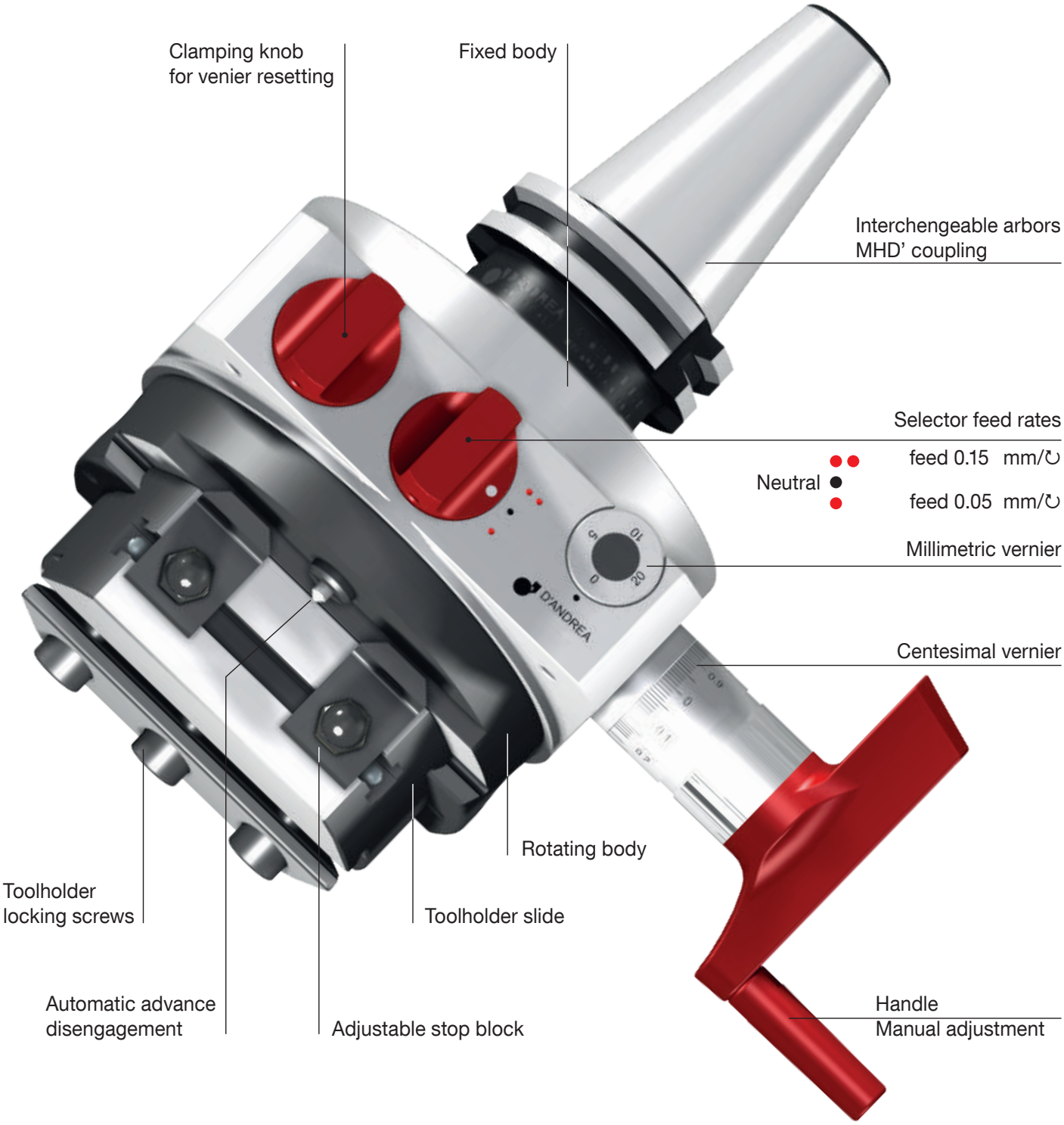

APPLICATION

The TA-S2 heads can be applied to the machine tools through the driving arbor **(1)** and an anti-rotation stop block **(2)**. For heavy machining it is recommended to apply a flange.

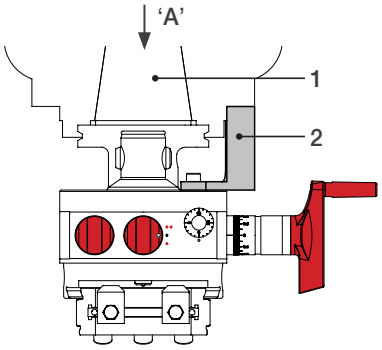

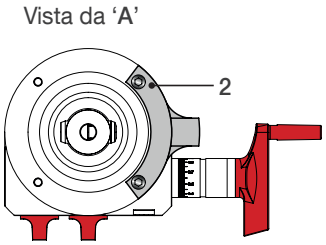

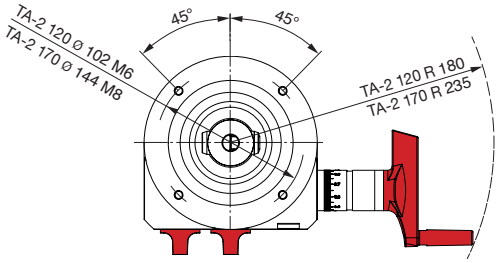

TECHNICAL DATA

TA-S2.120	TECHNICAL DATA		TA-S2.170
250	Max workable ø	mm	400
40	C radial traverse	mm	60
1000	Maximum speed	RPM	800
6.5	Net weight	Kg	19
400	Torque	Nm	800
2 - 6	Motor Power	Kw	3.5 - 11

REF.		CODE	Kg		
K02	**TA-S2.120**	500212031001	5,8		
P95	TA-S2.120	433030300951	0,4		
K02	**TA-S2.170**	500217031001	14		
P140	TA-S2.170	433040401401	0,8		

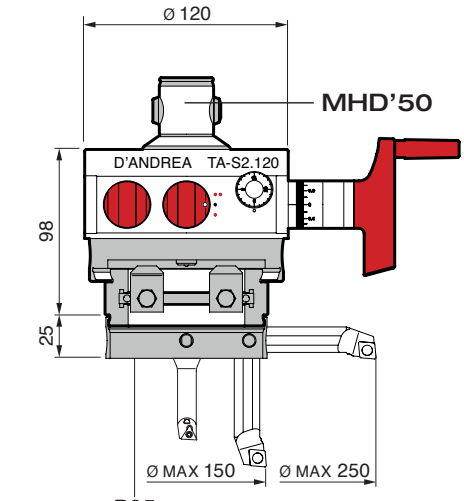

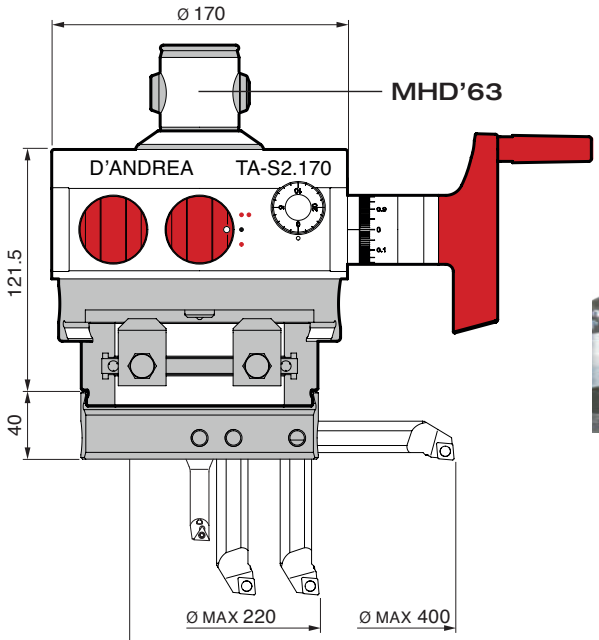

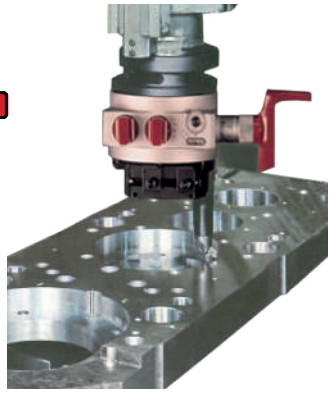

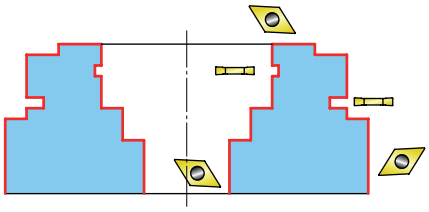

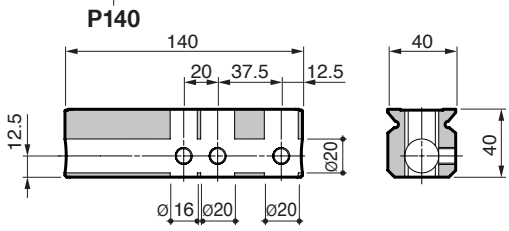

D'ANDREA
Lainate - Milano

D'ANDREA Molise
Castel del Giudice - Isernia

made in italy

You will be welcome in Italy
Wir warten auf euch in Italien
Os esperamos en Italia
Nous vous attendons en Italie
Vi aspettiamo in Italia

Ernesto D'Andrea

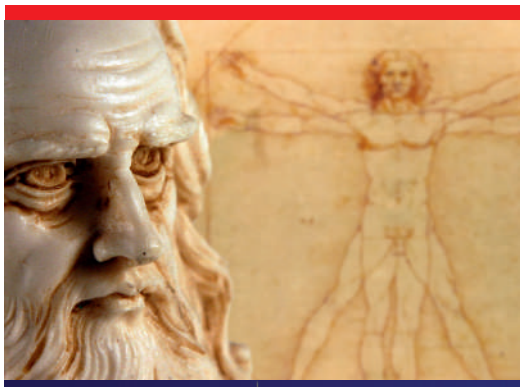

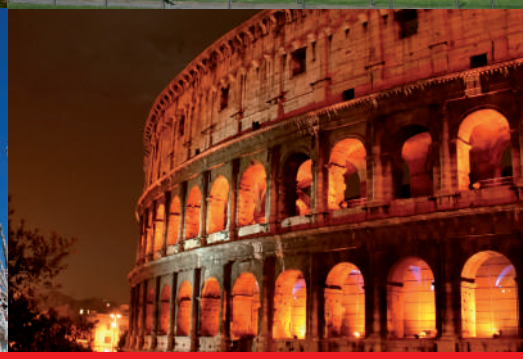

D'ANDREA IN ITALY AND WORLDWIDE

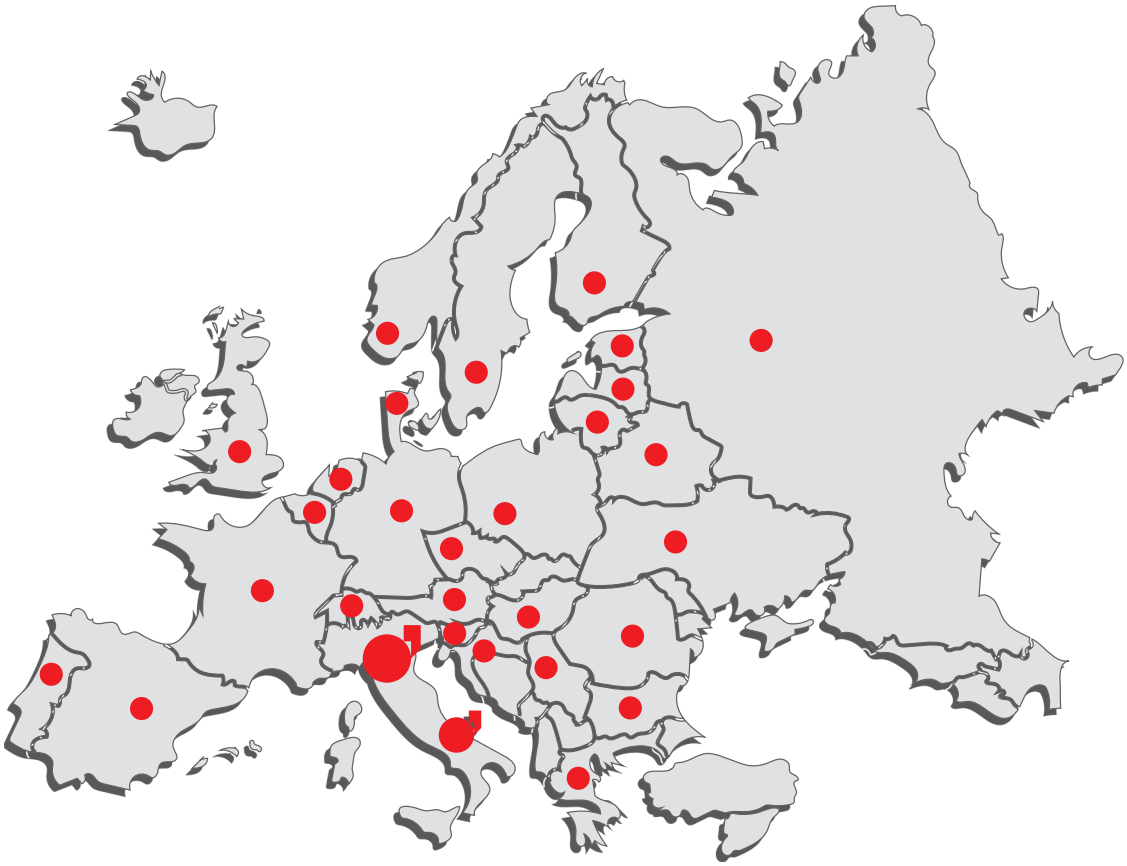

© **D'ANDREA s.p.a.**
Via Garbagnate 71 • 20045 Lainate (MI) Italy
Tel. +39 02 937532.1 • Fax +39 02 93753240
www.dandrea.com • info@dandrea.com

The technical data shown in this catalogue are not binding and they can be modified also without notice.

D'ANDREA®

THE ART OF PRECISION

Via Garbagnate, 71
20045 Lainate (MI) Italy

t. +39 02.937532.1
f. +39 02.93753240

info@dandrea.com
www.dandrea.com

11/24 Cod. 181001001020